0199

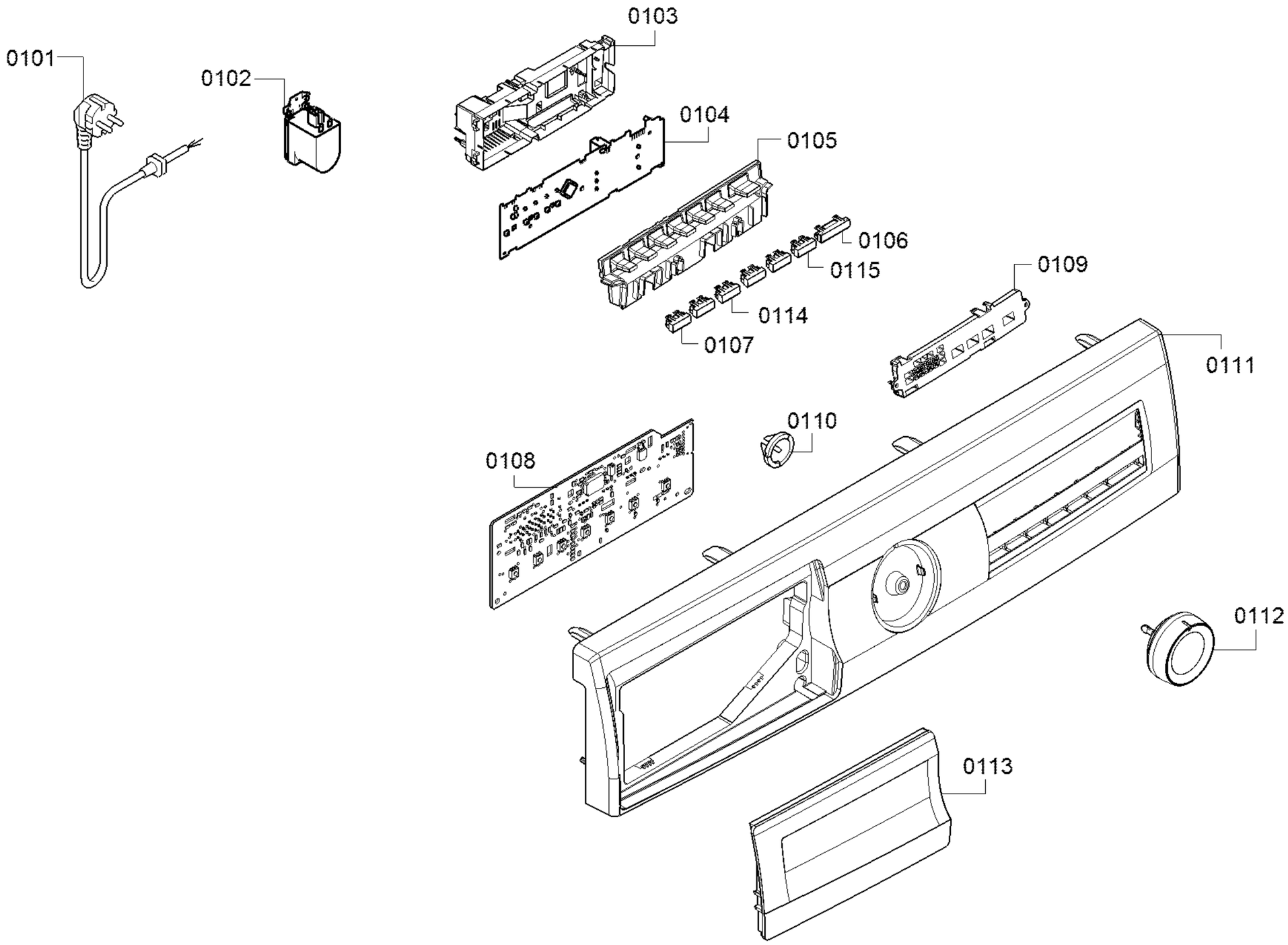

Copyright © (2018) by Balay / 205502

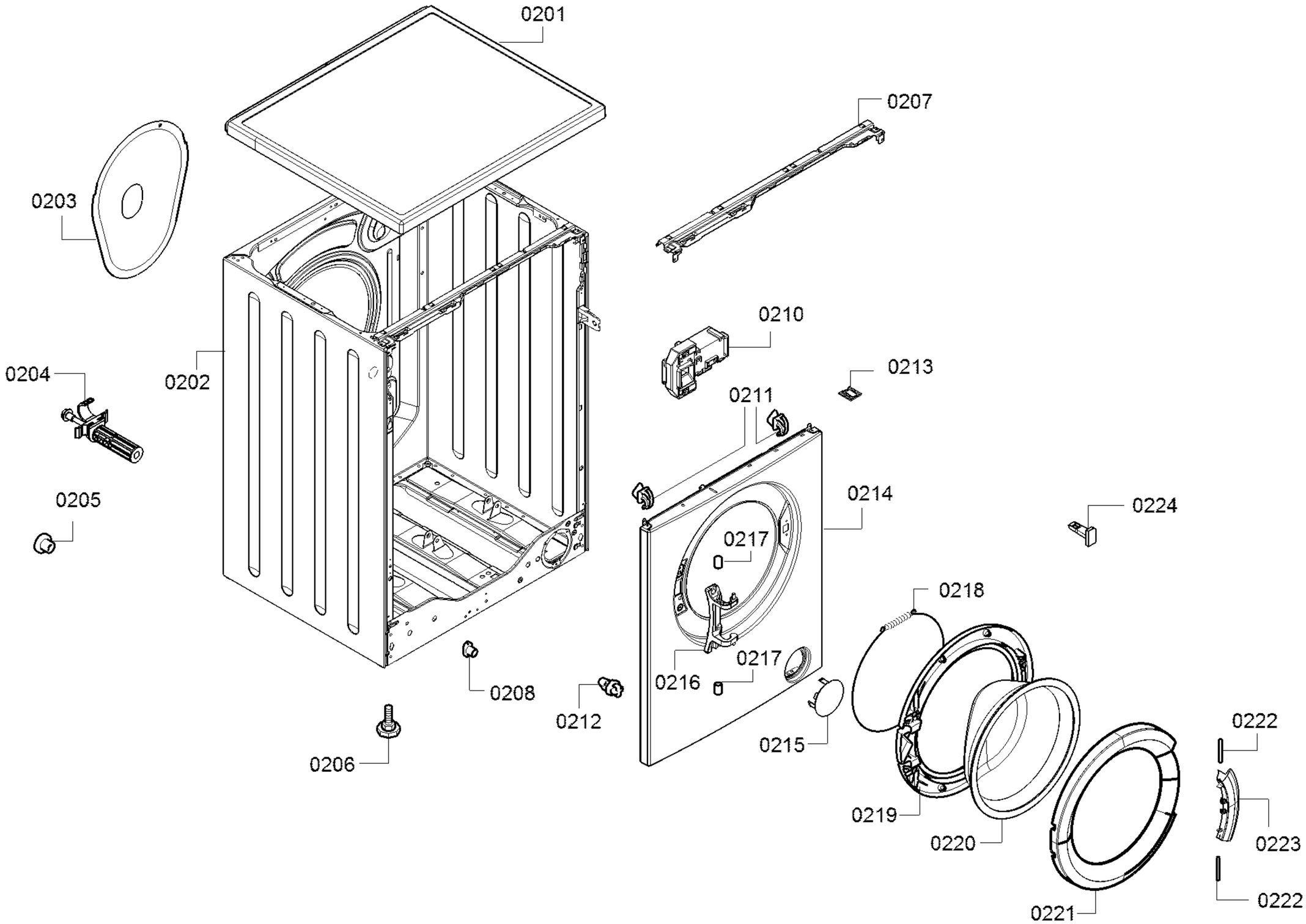

Copyright © (2018) by Balay / 205502

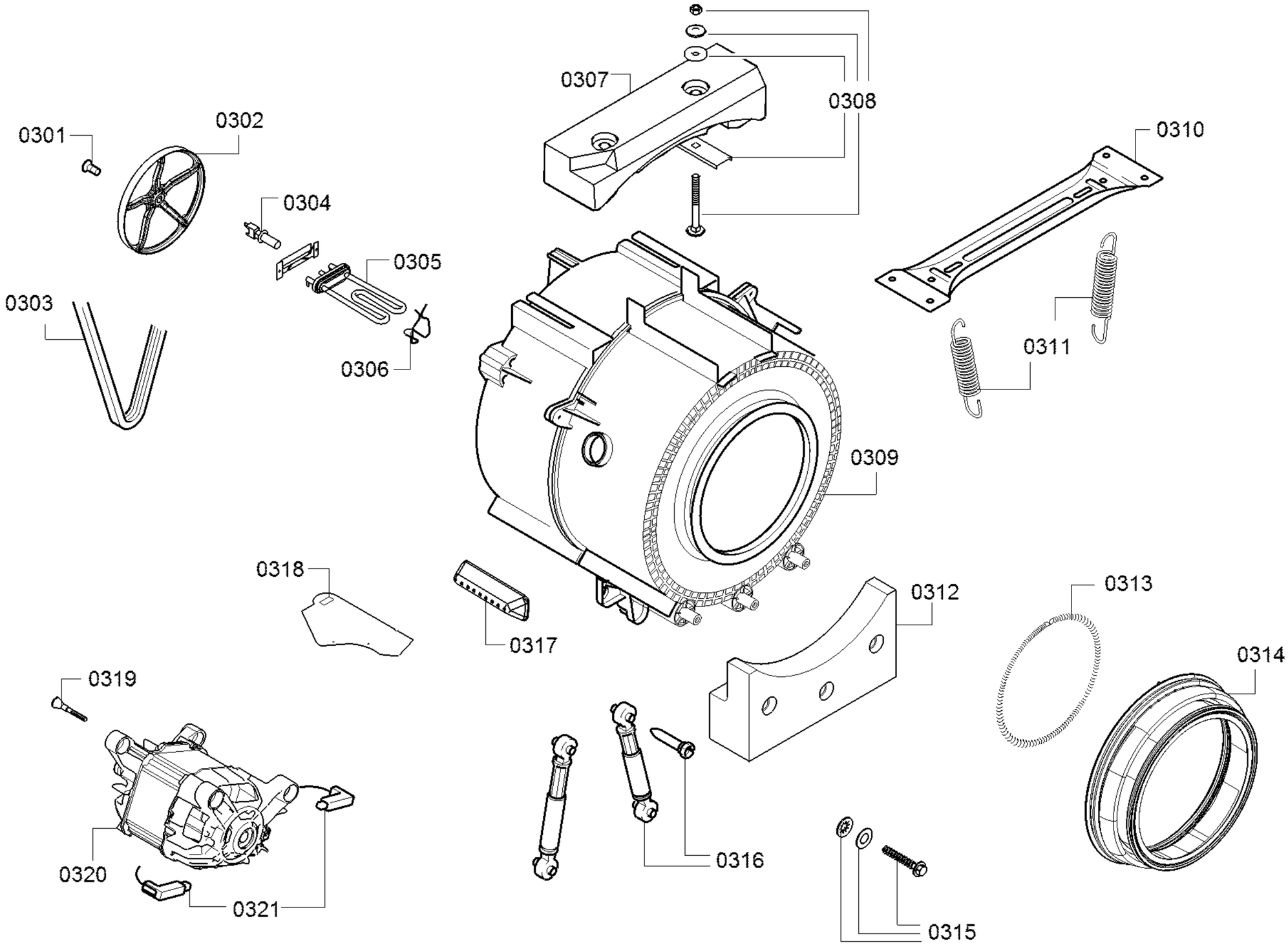

Copyright © (2018) by Balay / 205502

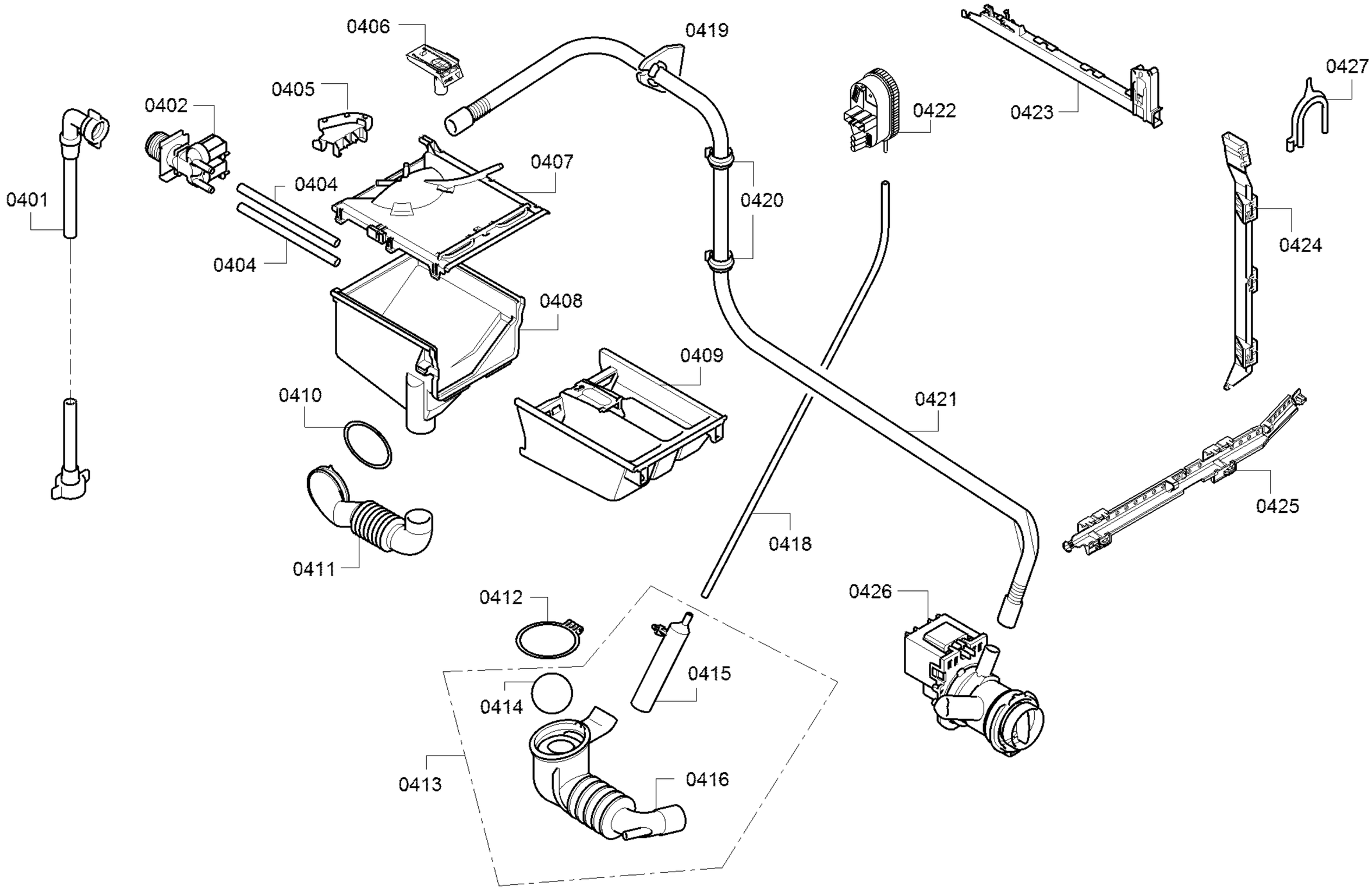

Copyright © (2018) by Balay / 205502

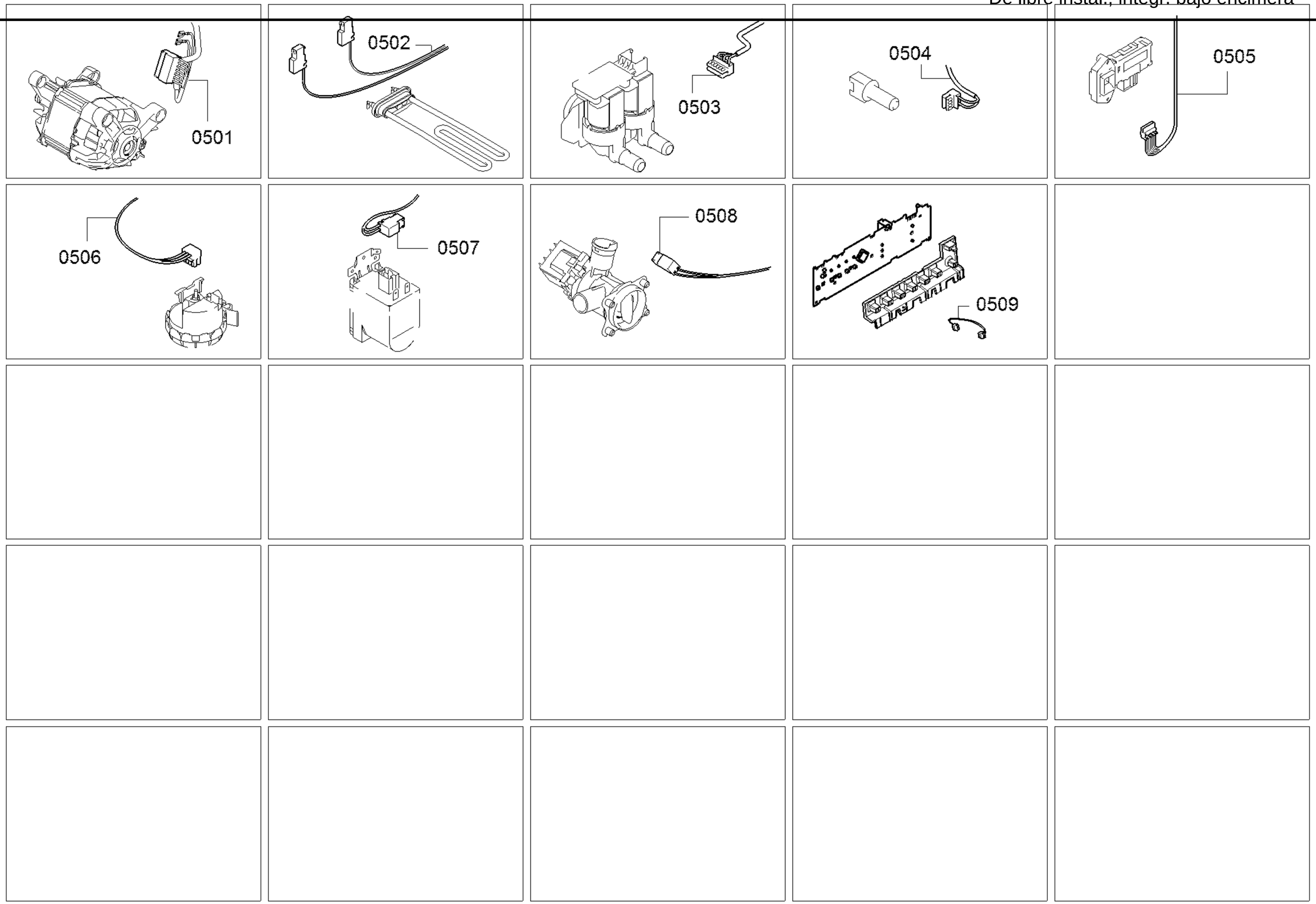

Copyright © (2018) by Balay / 205502