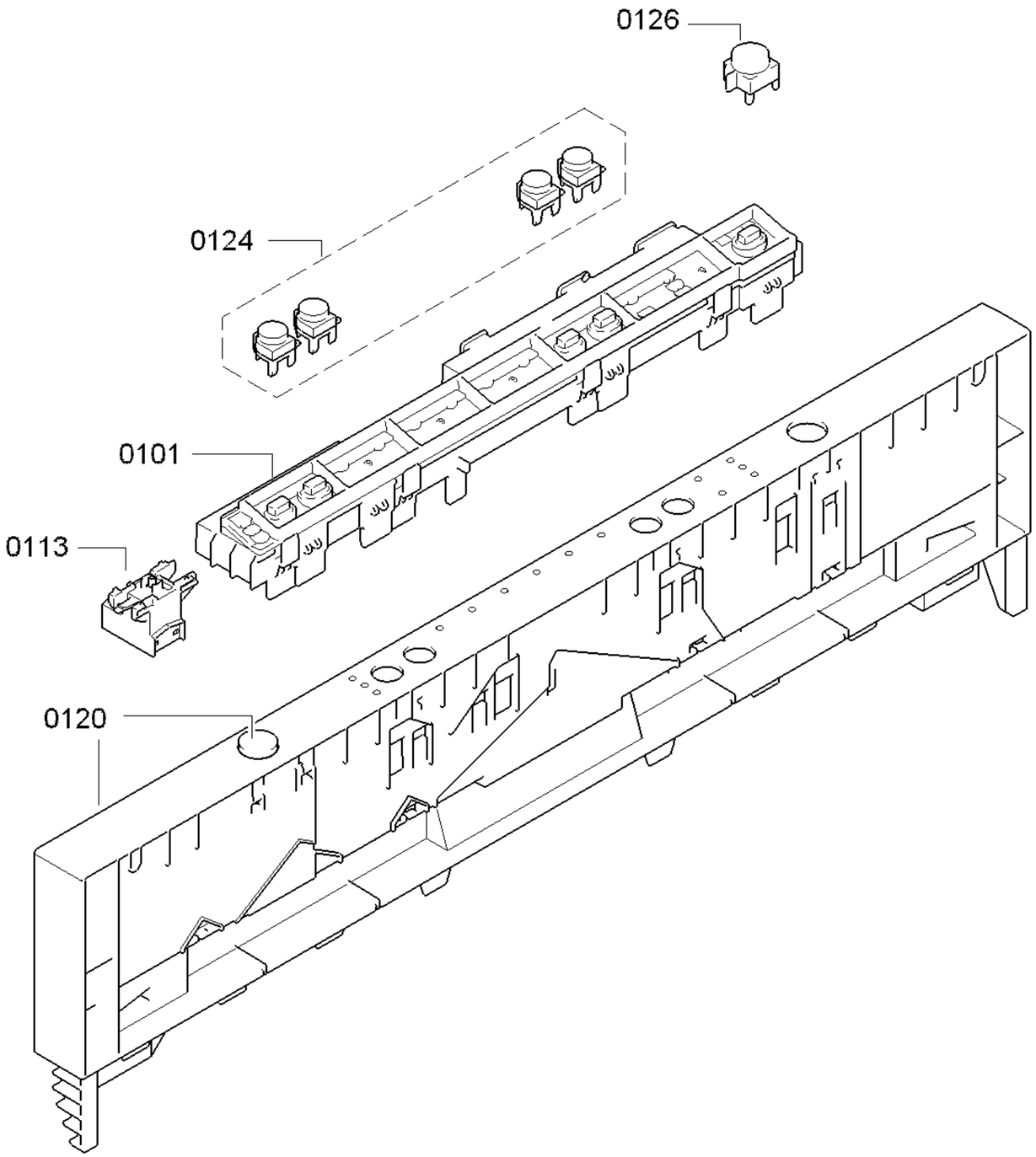

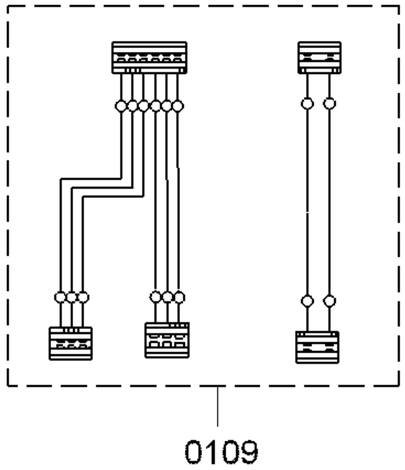

Copyright © (2014) by Balay / 205502

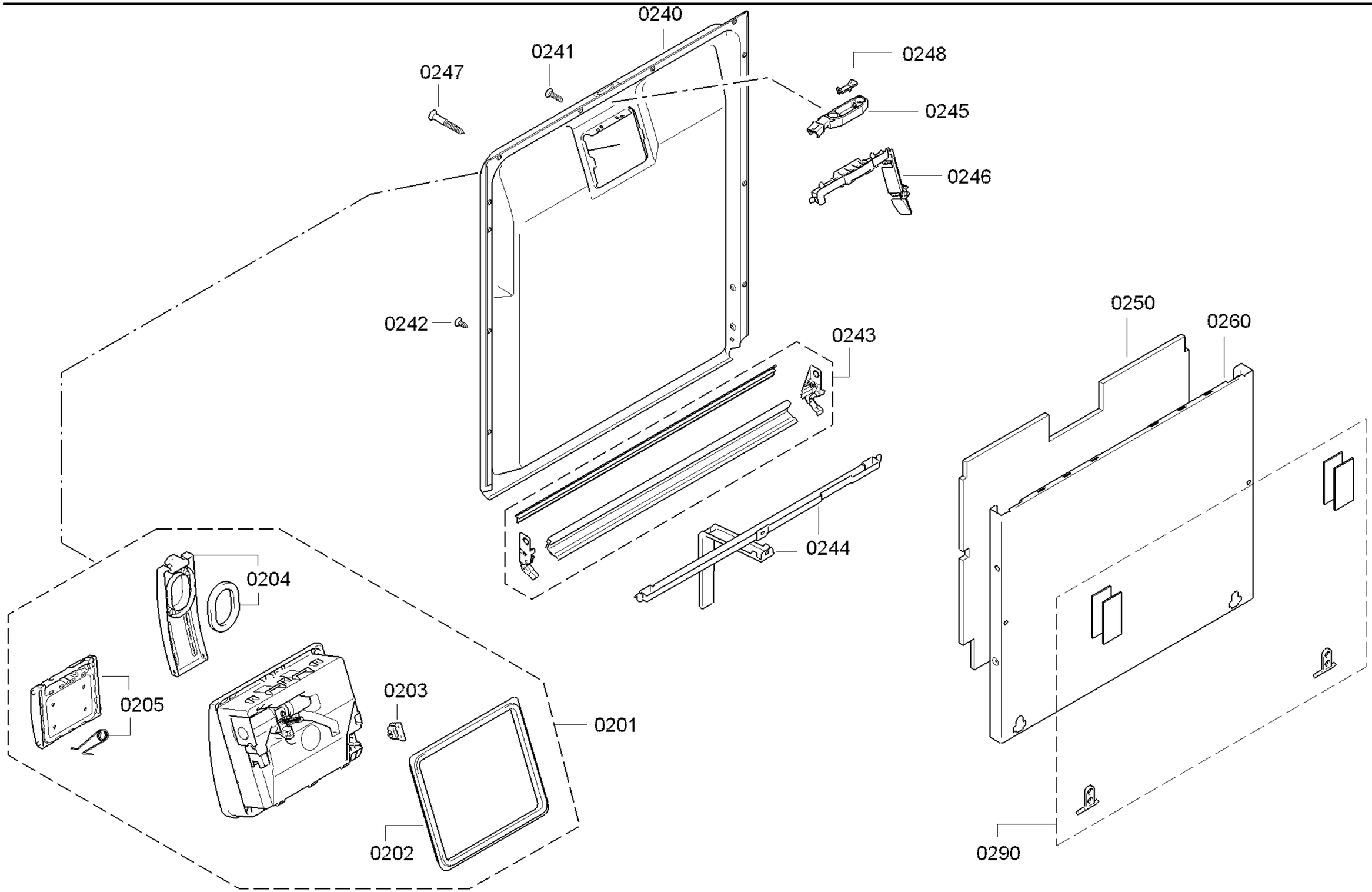

Copyright © (2014) by Balay / 205502

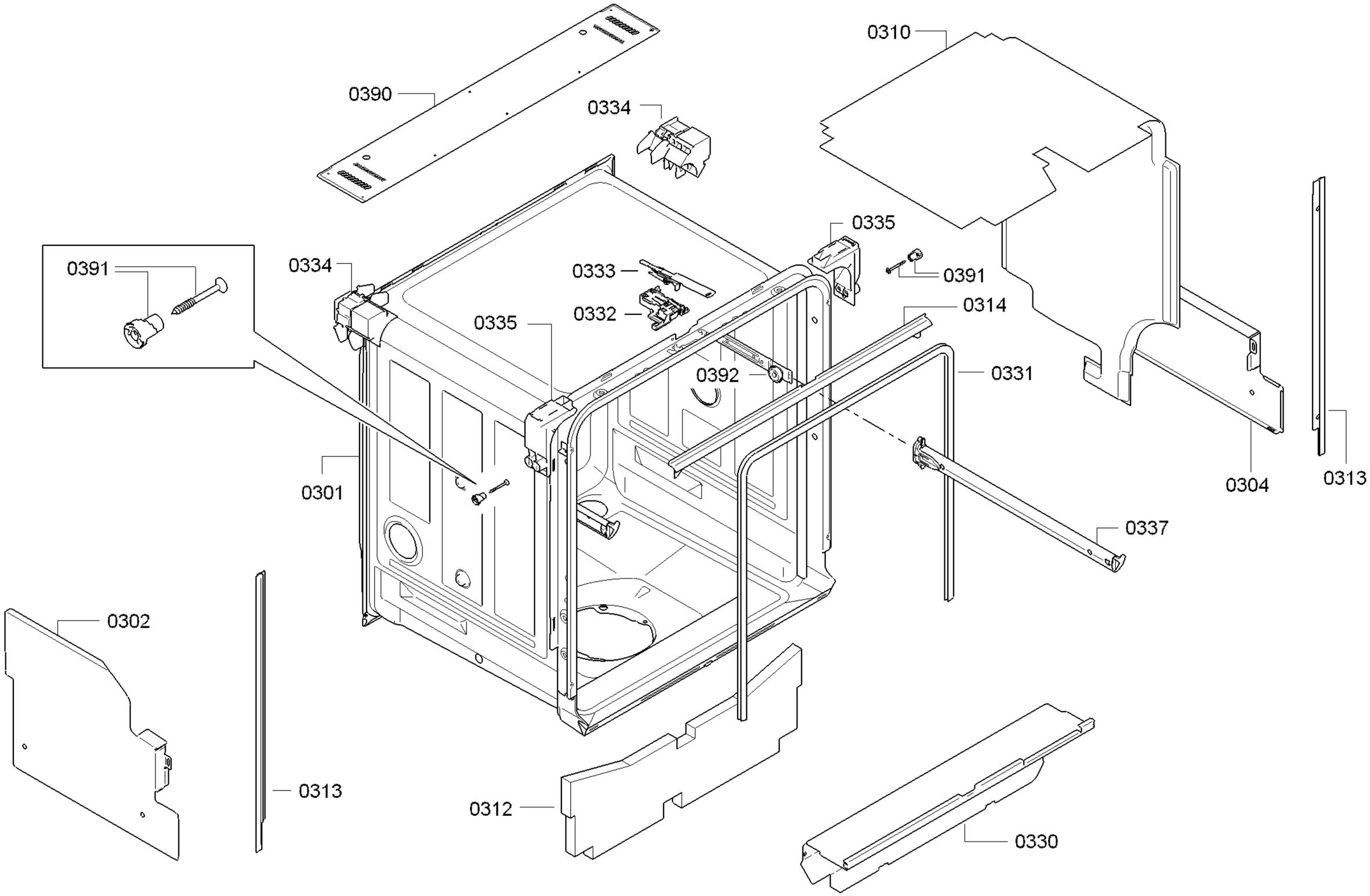

Copyright © (2014) by Balay / 205502

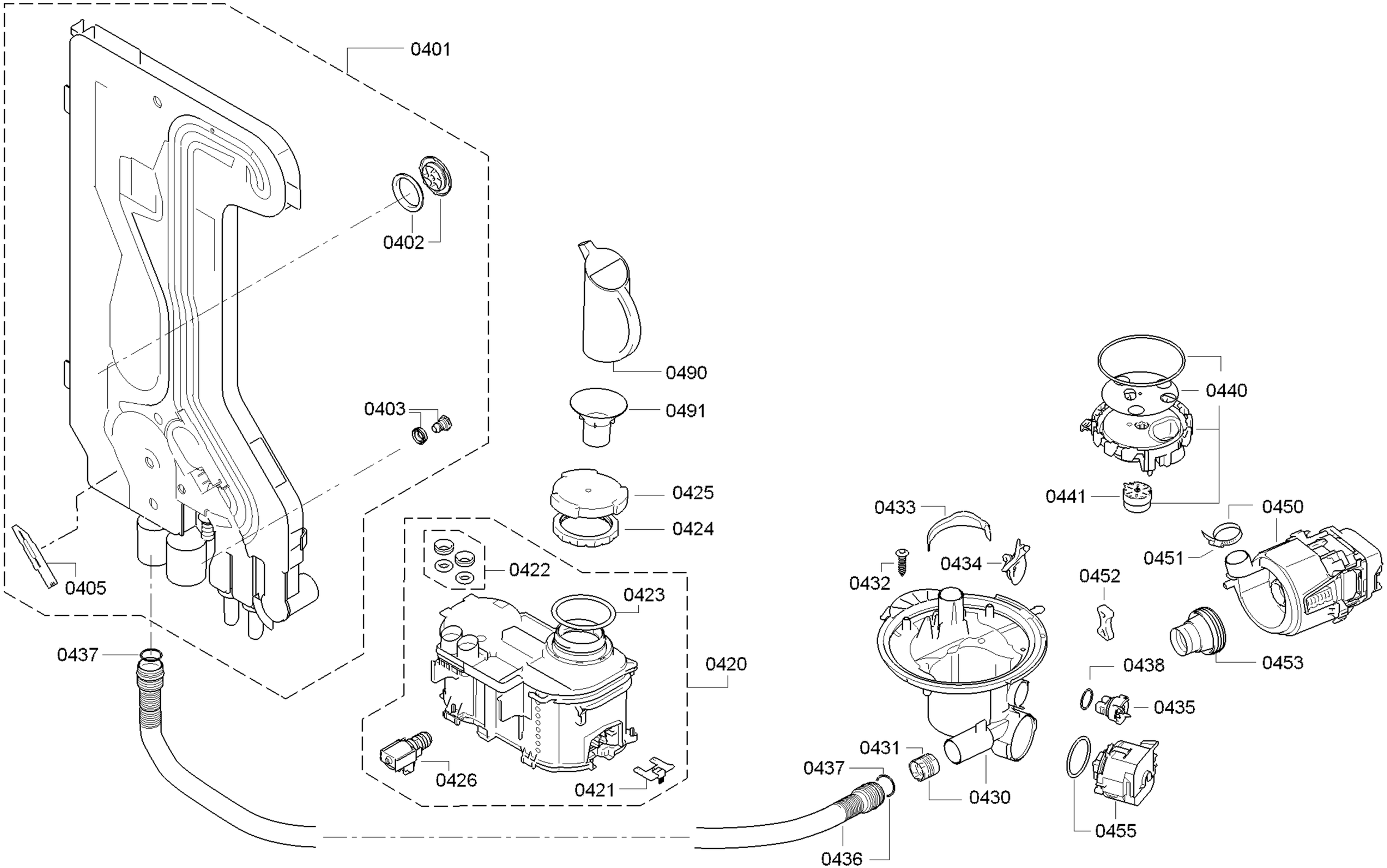

Copyright © (2014) by Balay / 205502

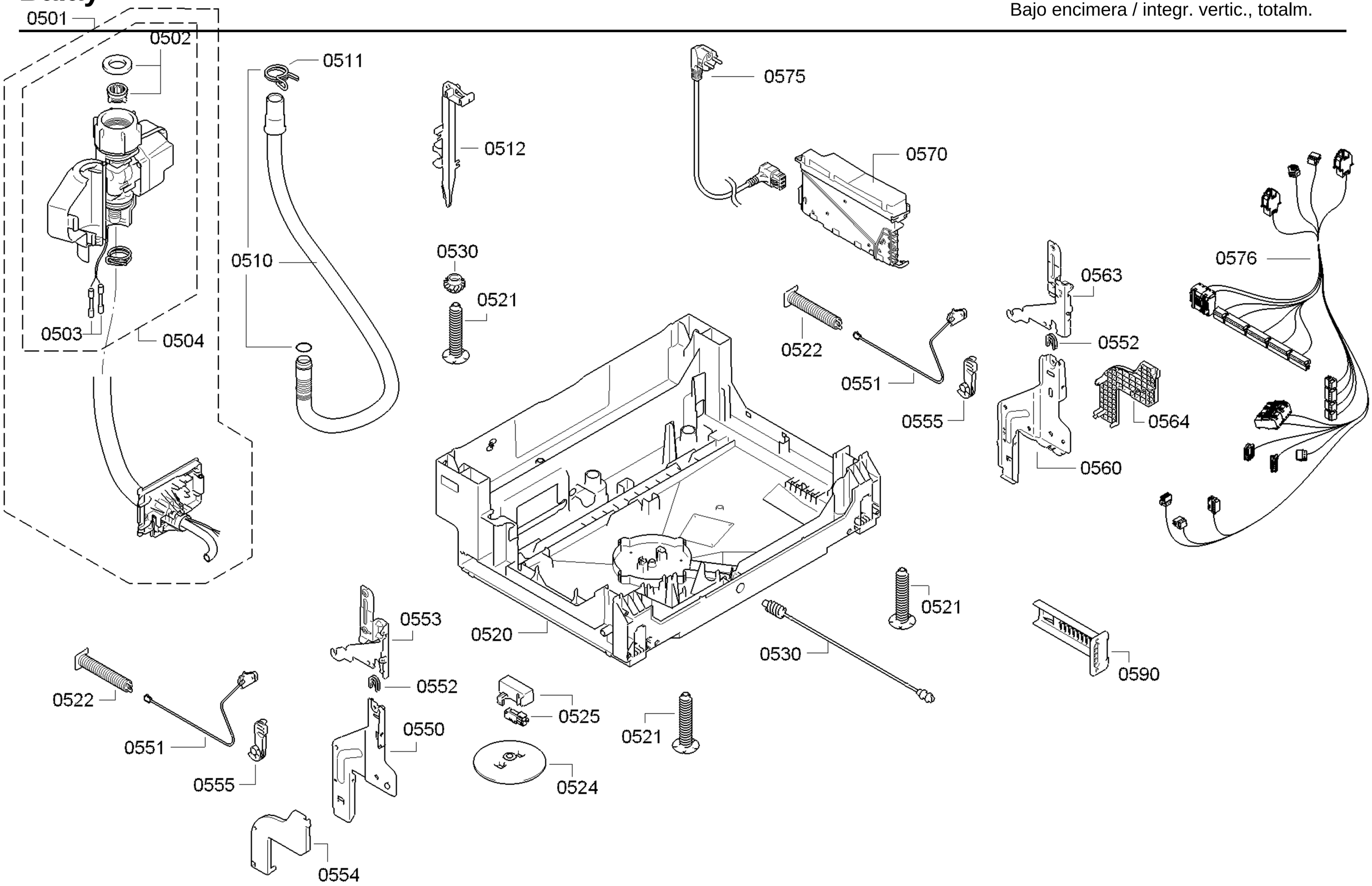

Copyright © (2014) by Balay / 205502

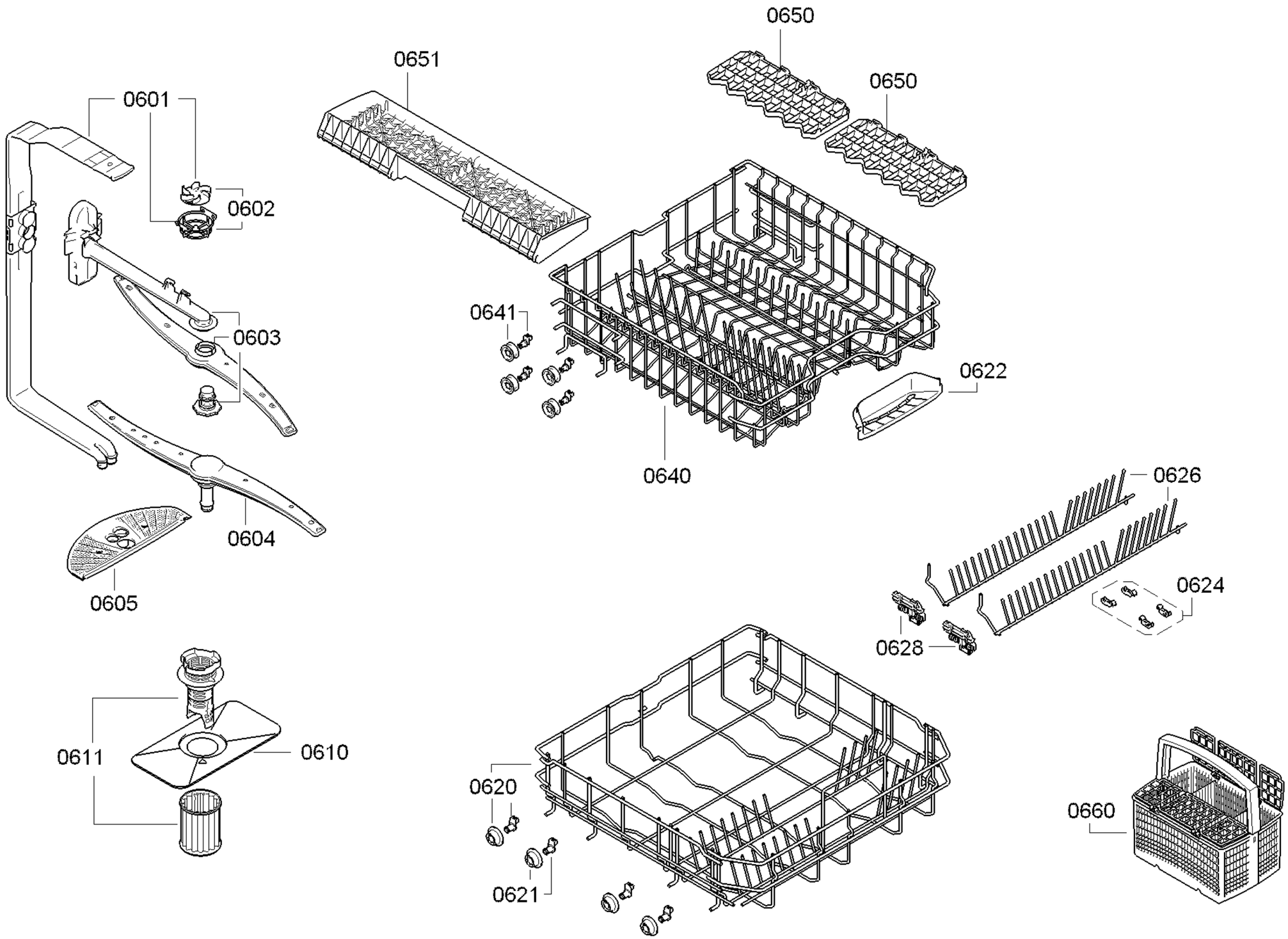

Copyright © (2014) by Balay / 205502