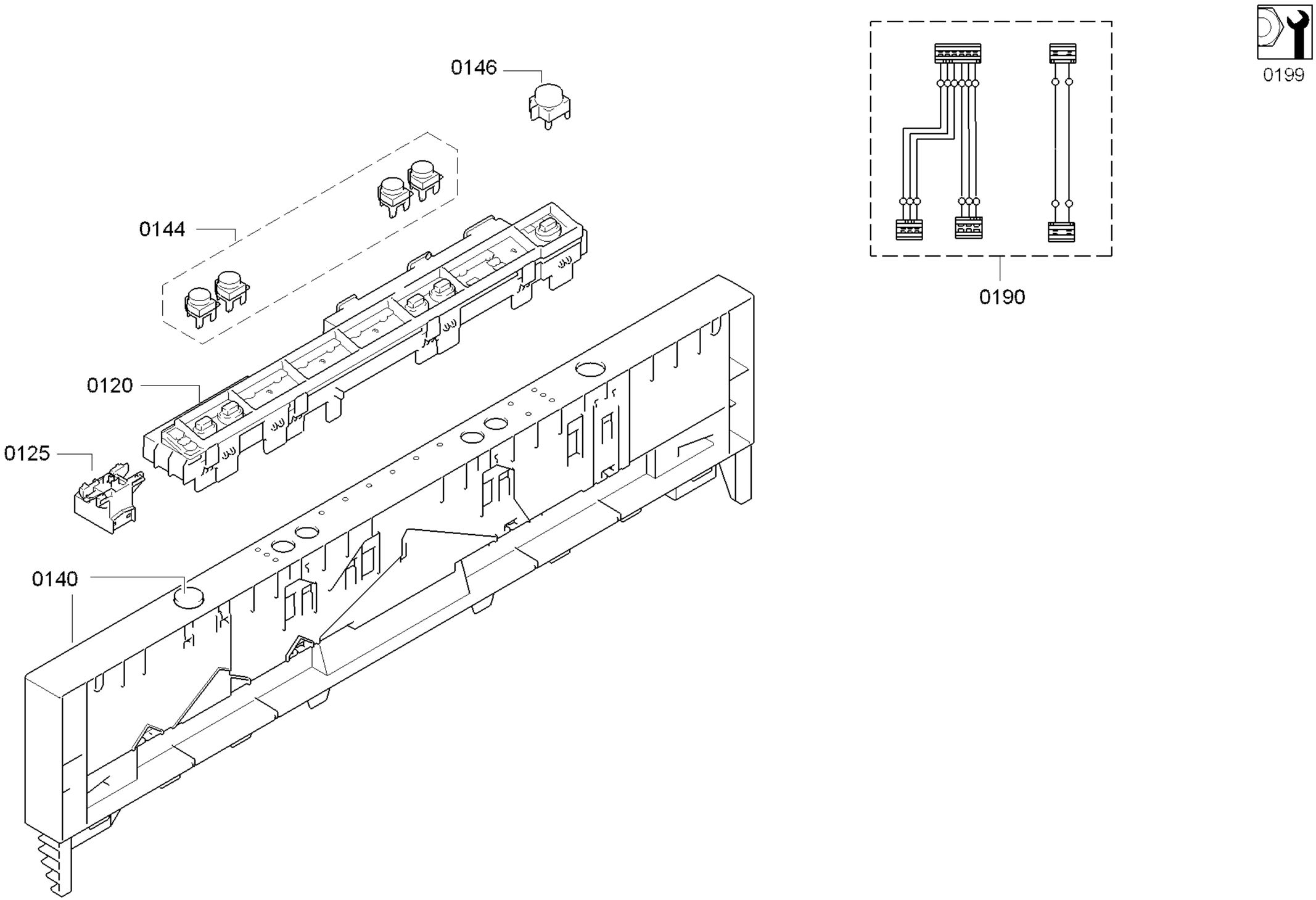

Copyright © (2021) by Balay / 205502

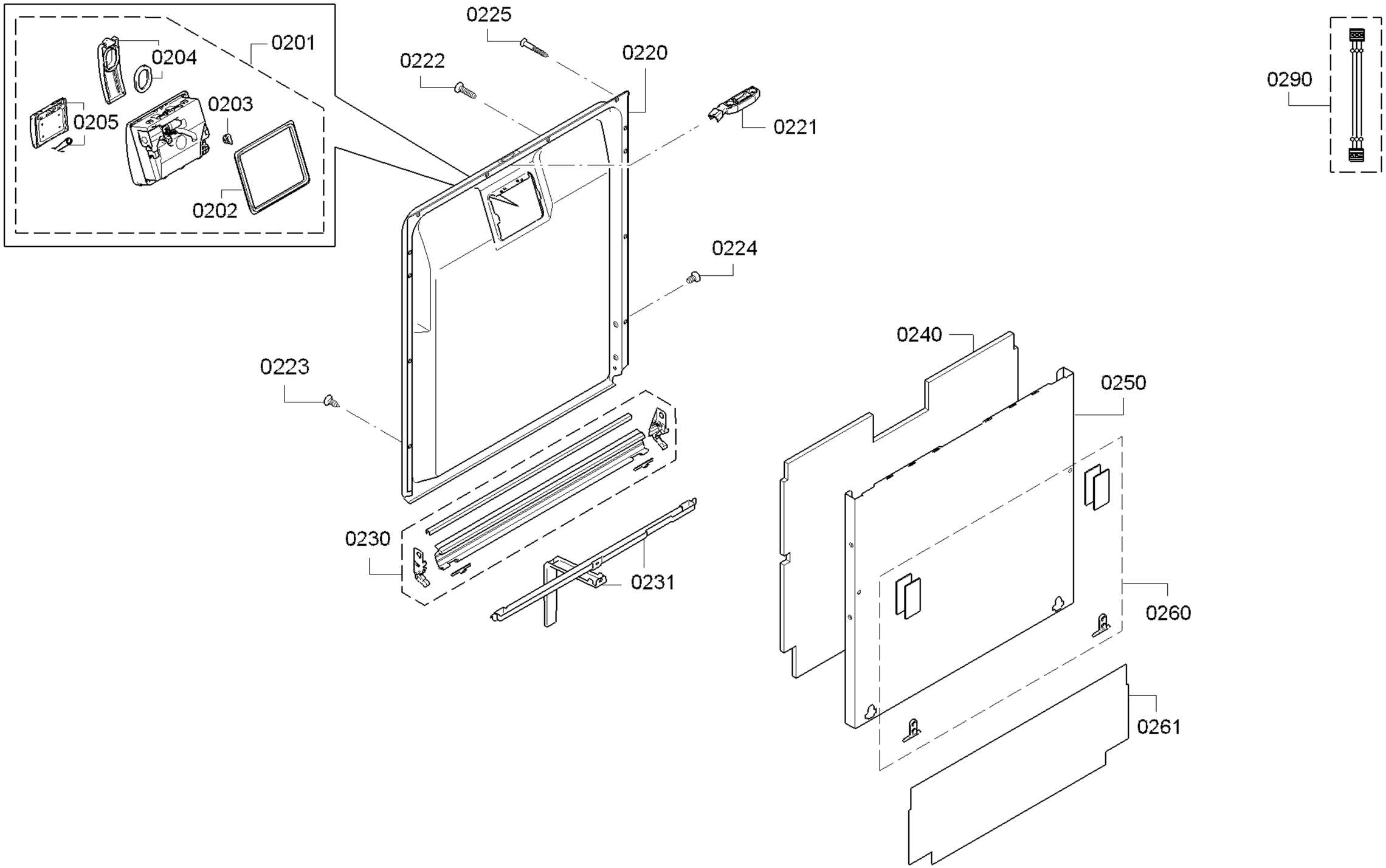

Copyright © (2021) by Balay / 205502

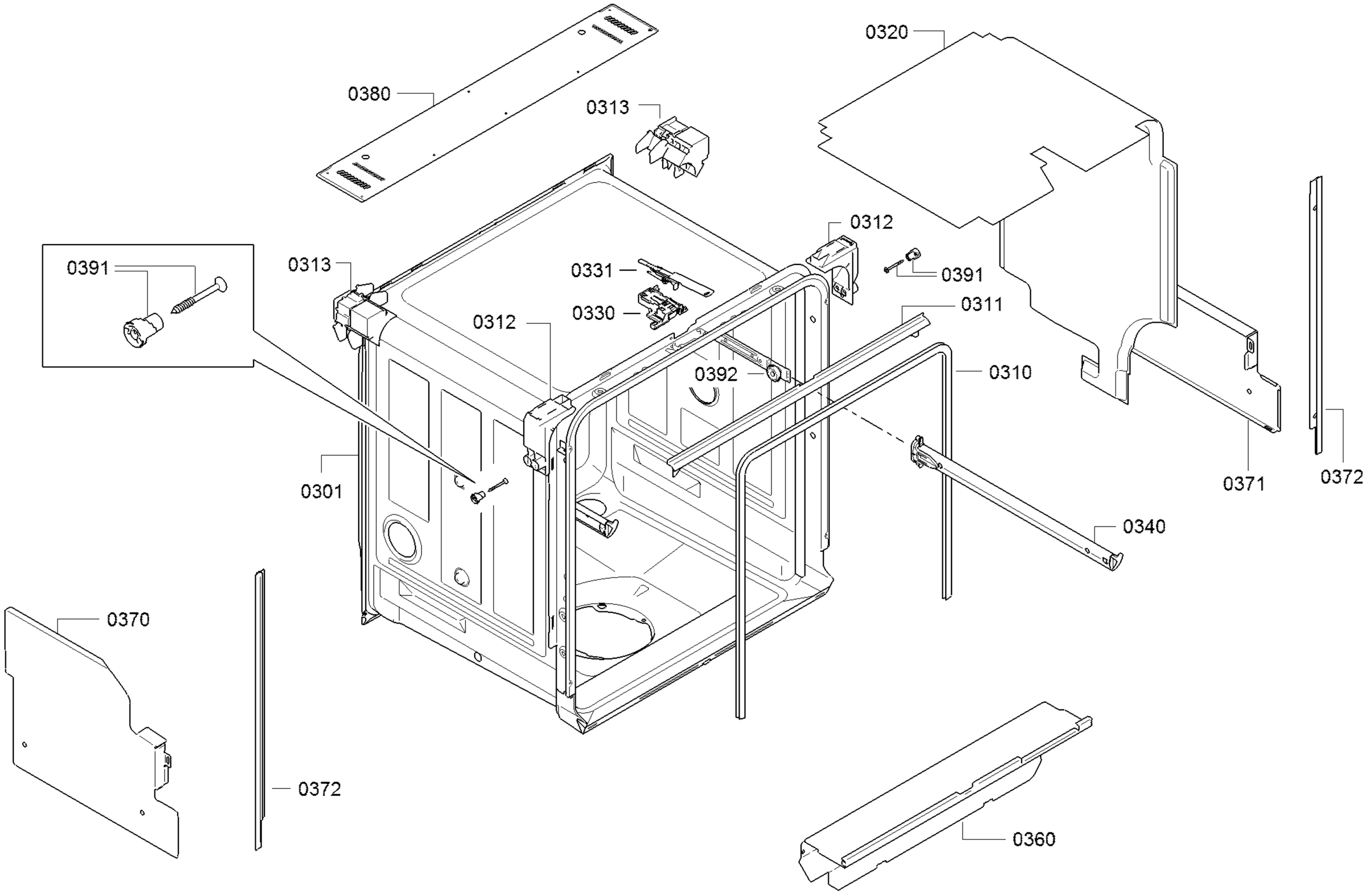

58300000187921 aet 003 c

Copyright © (2021) by Balay / 205502

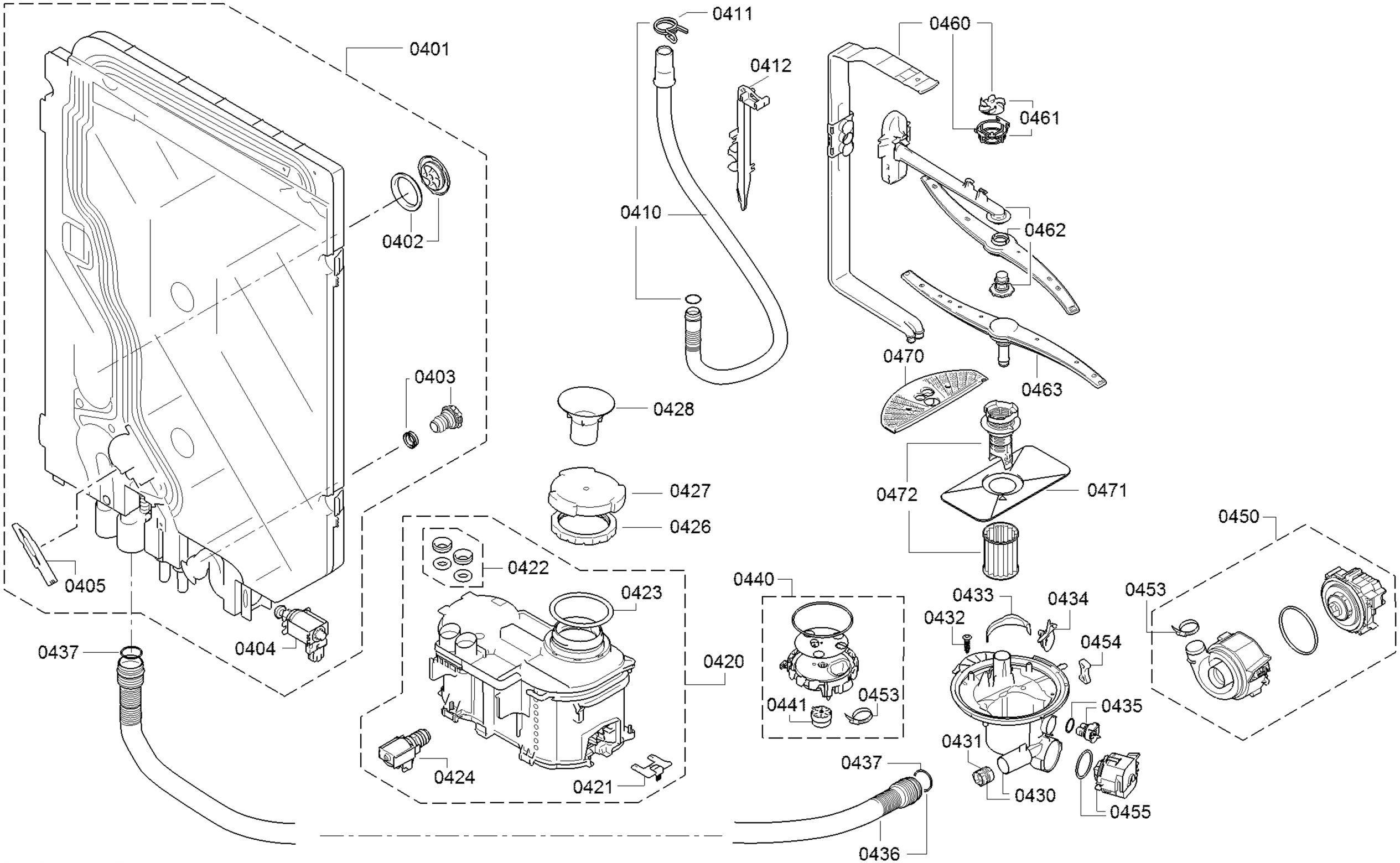

58300000187602 aet 004 f

Copyright © (2021) by Balay / 205502

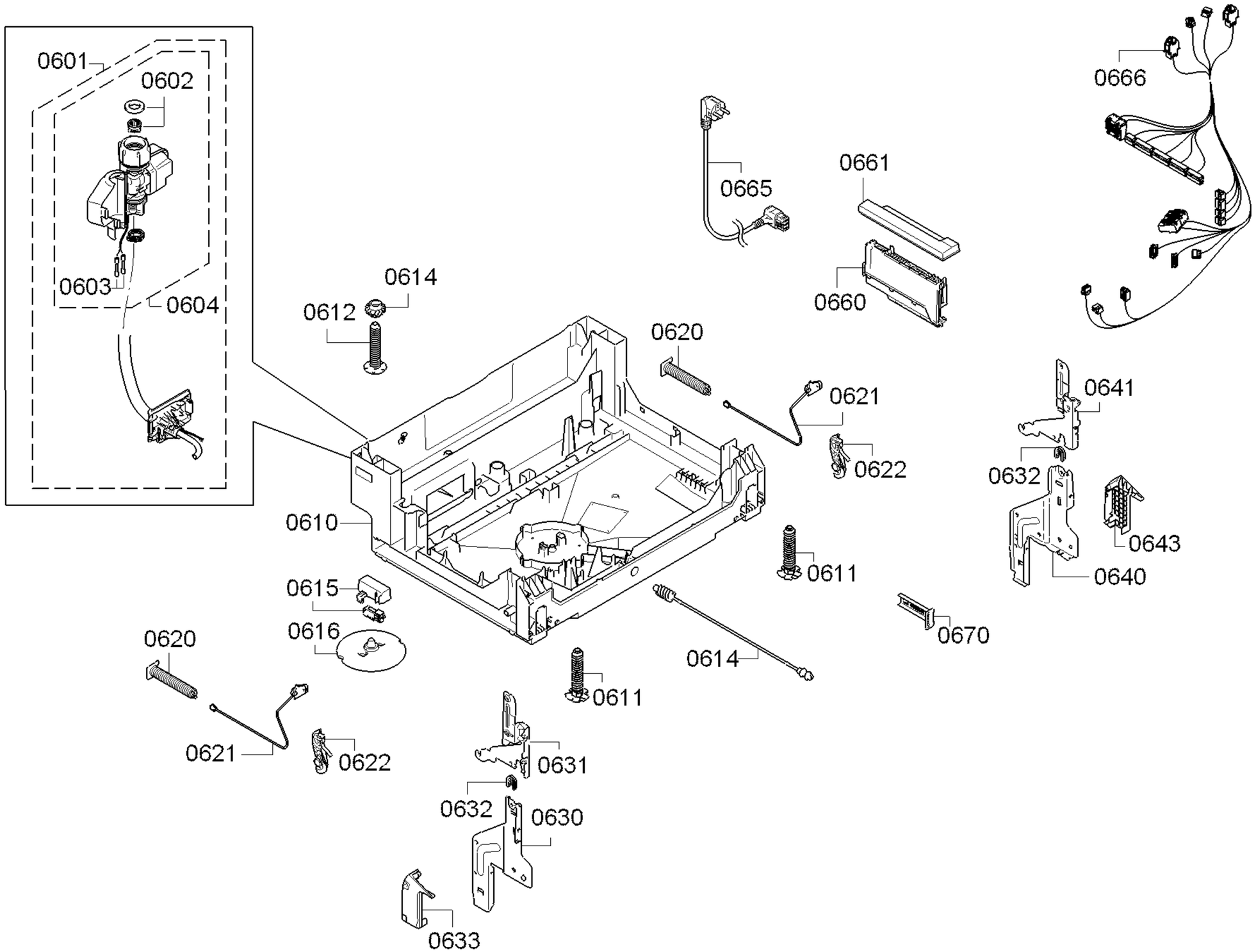

Copyright © (2021) by Balay / 205502

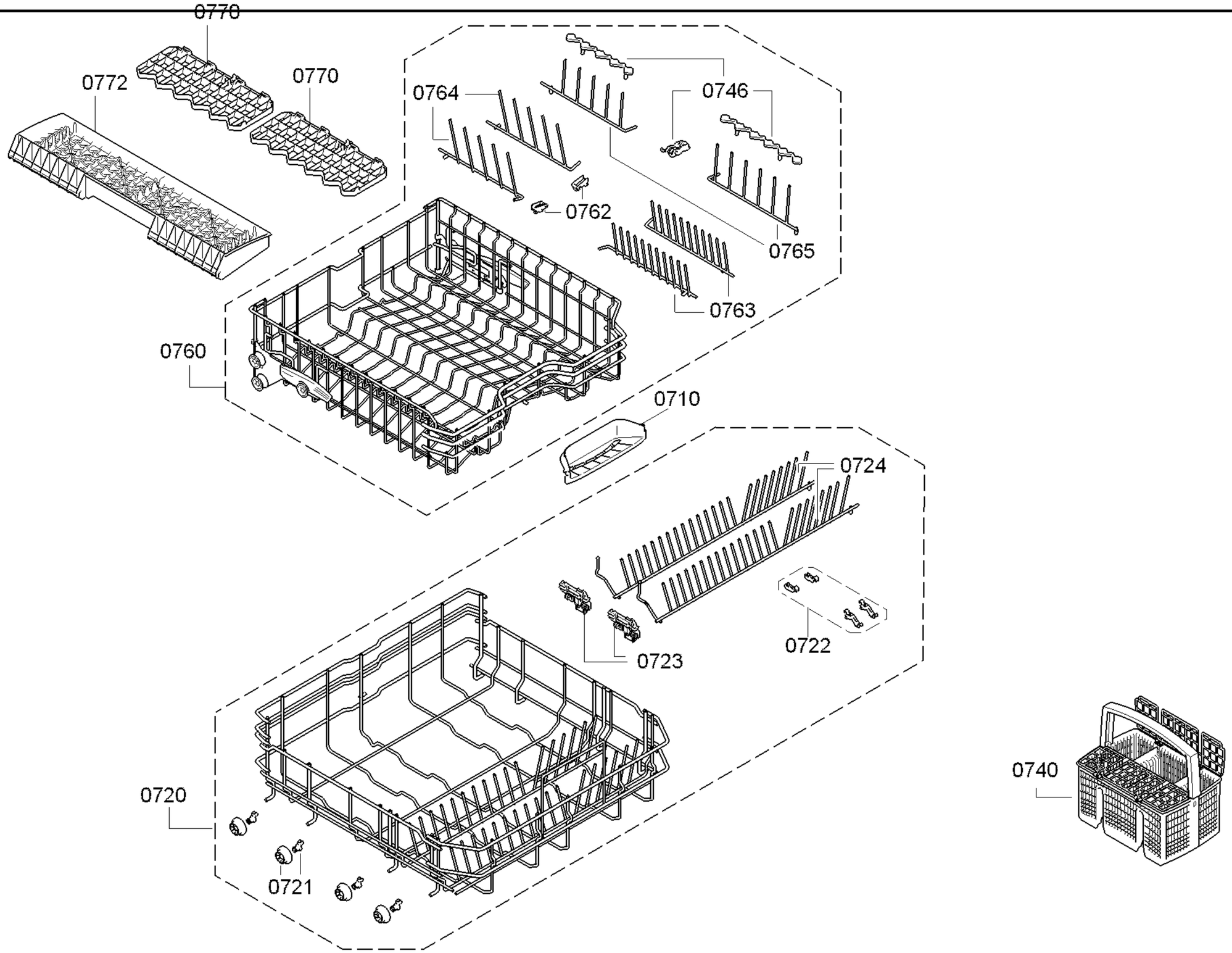

Copyright © (2021) by Balay / 205502