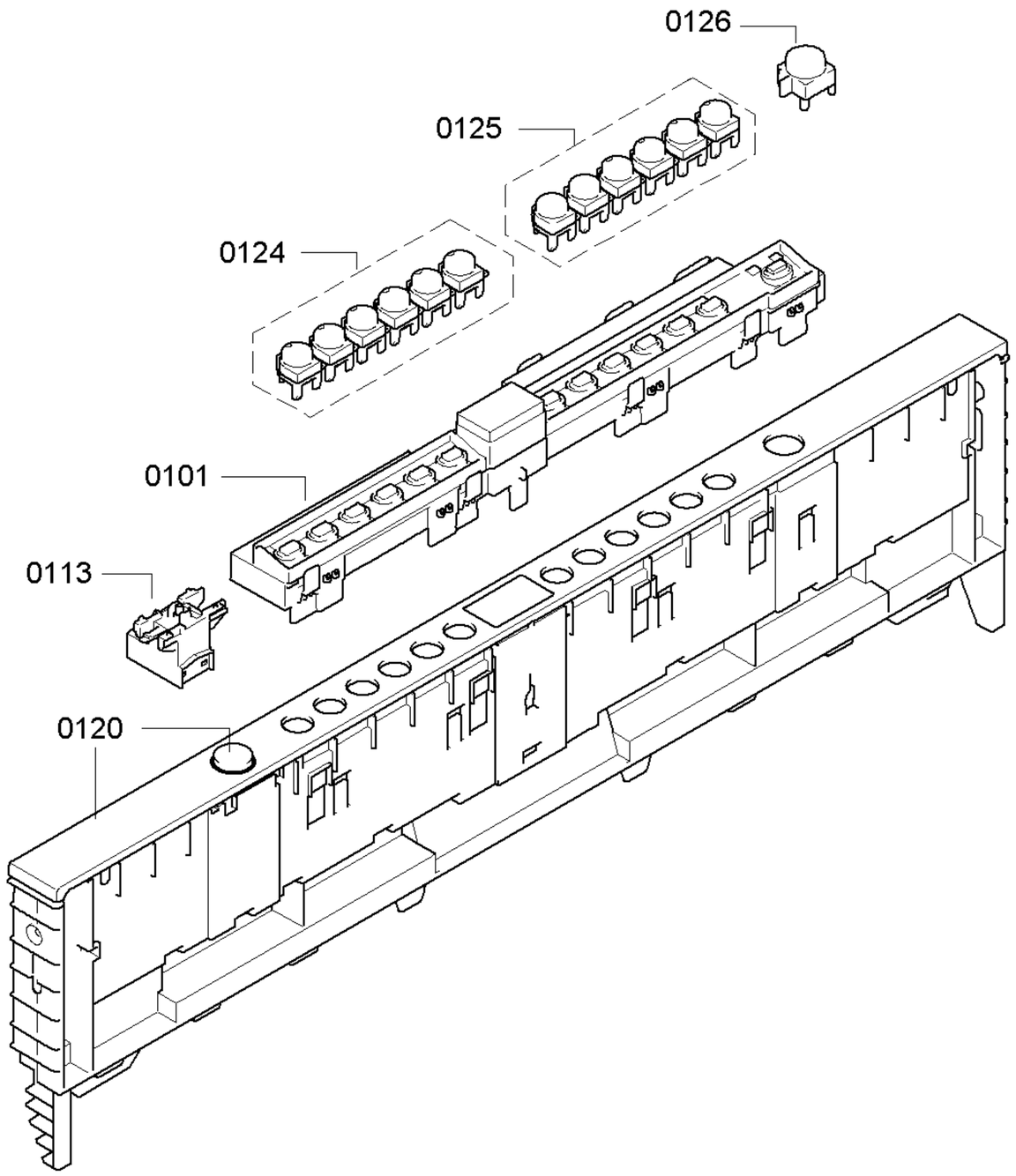

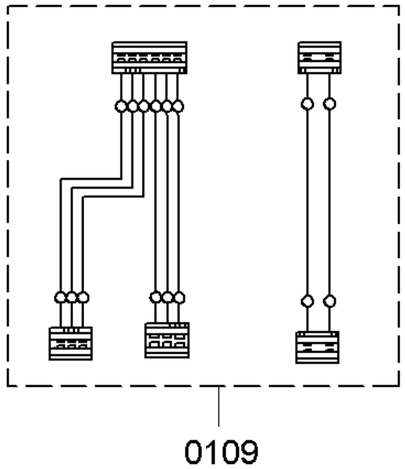

Copyright © (2012) by Balay / 205502

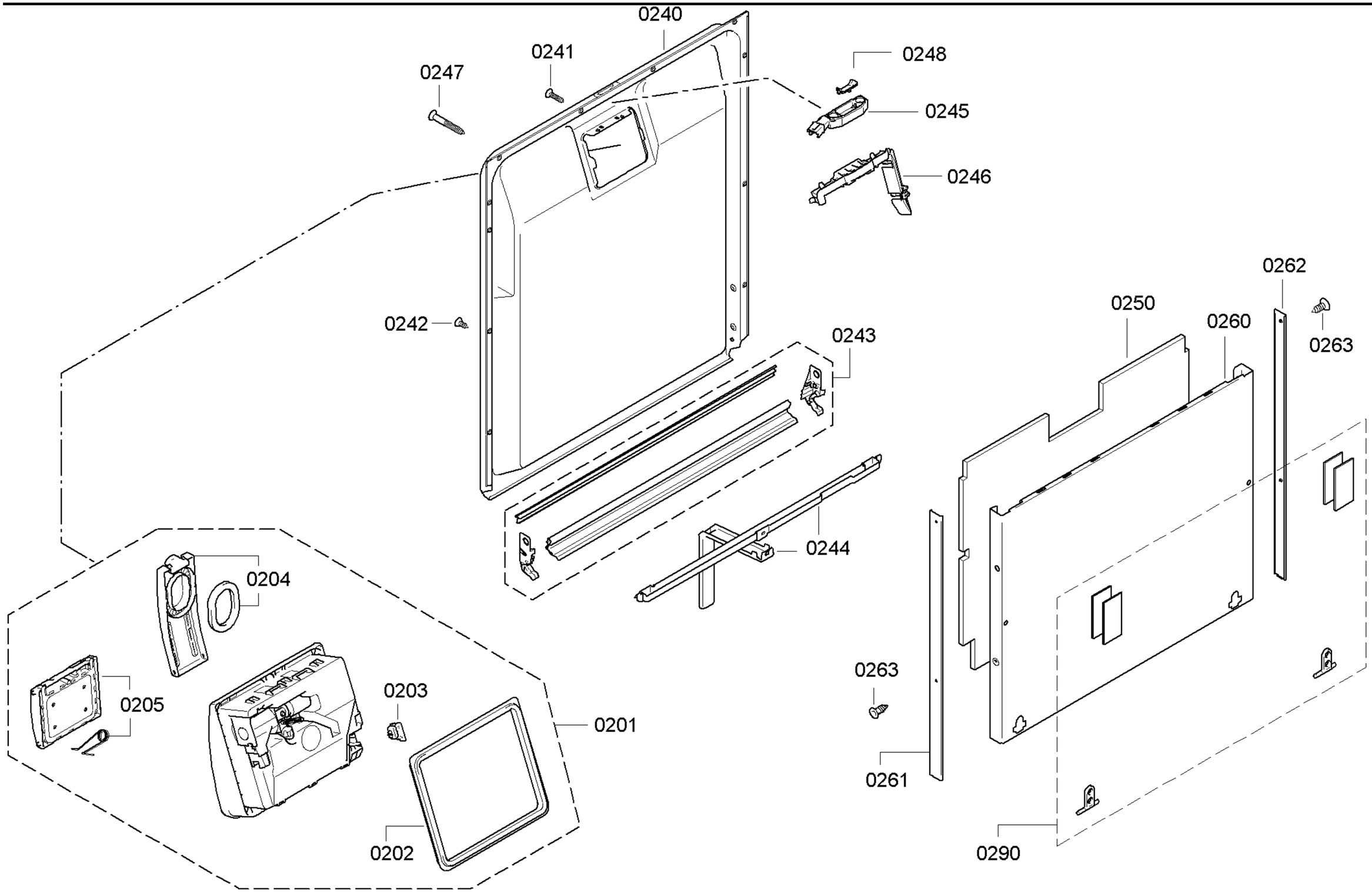

Copyright © (2012) by Balay / 205502

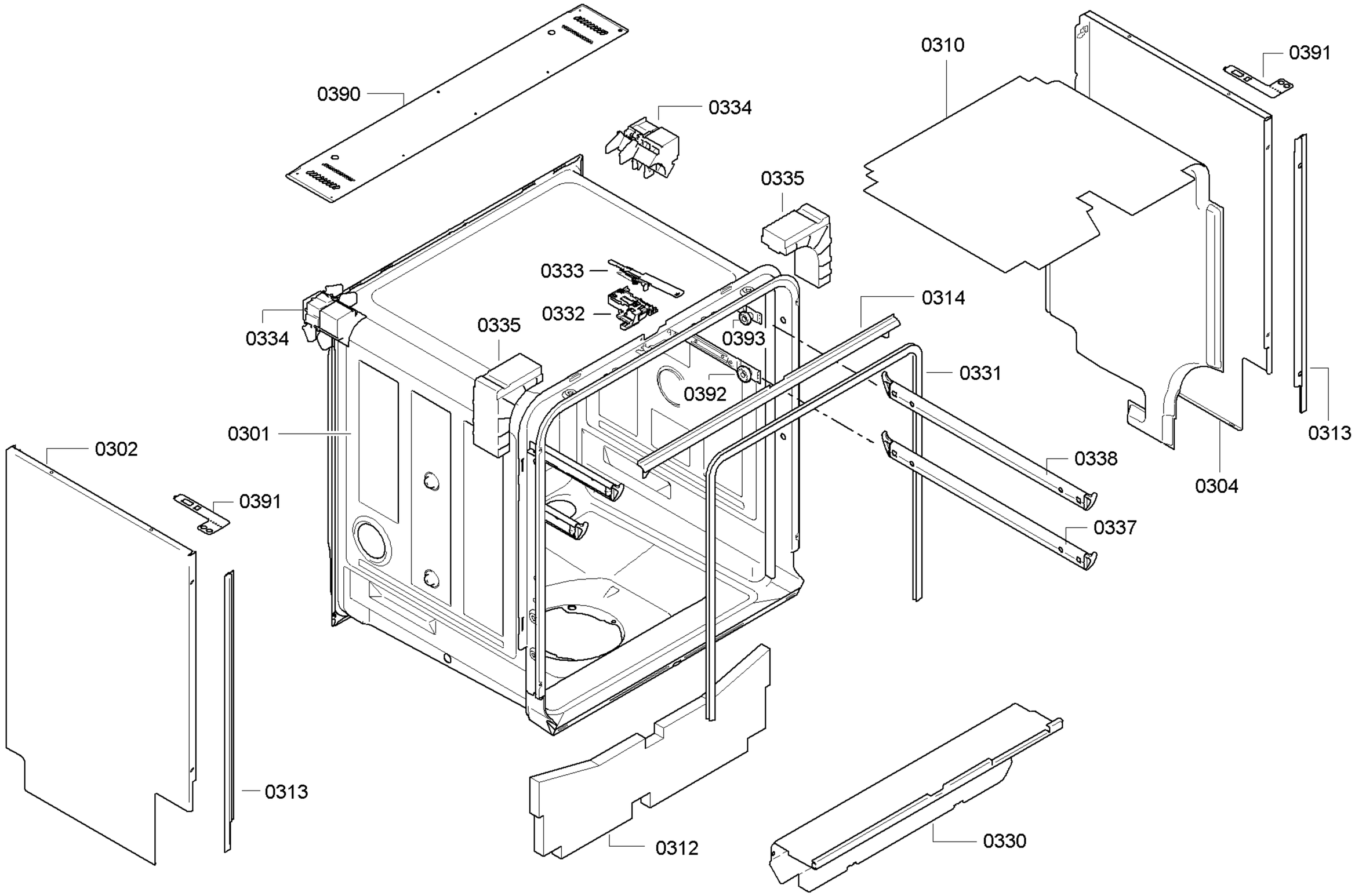

Copyright © (2012) by Balay / 205502

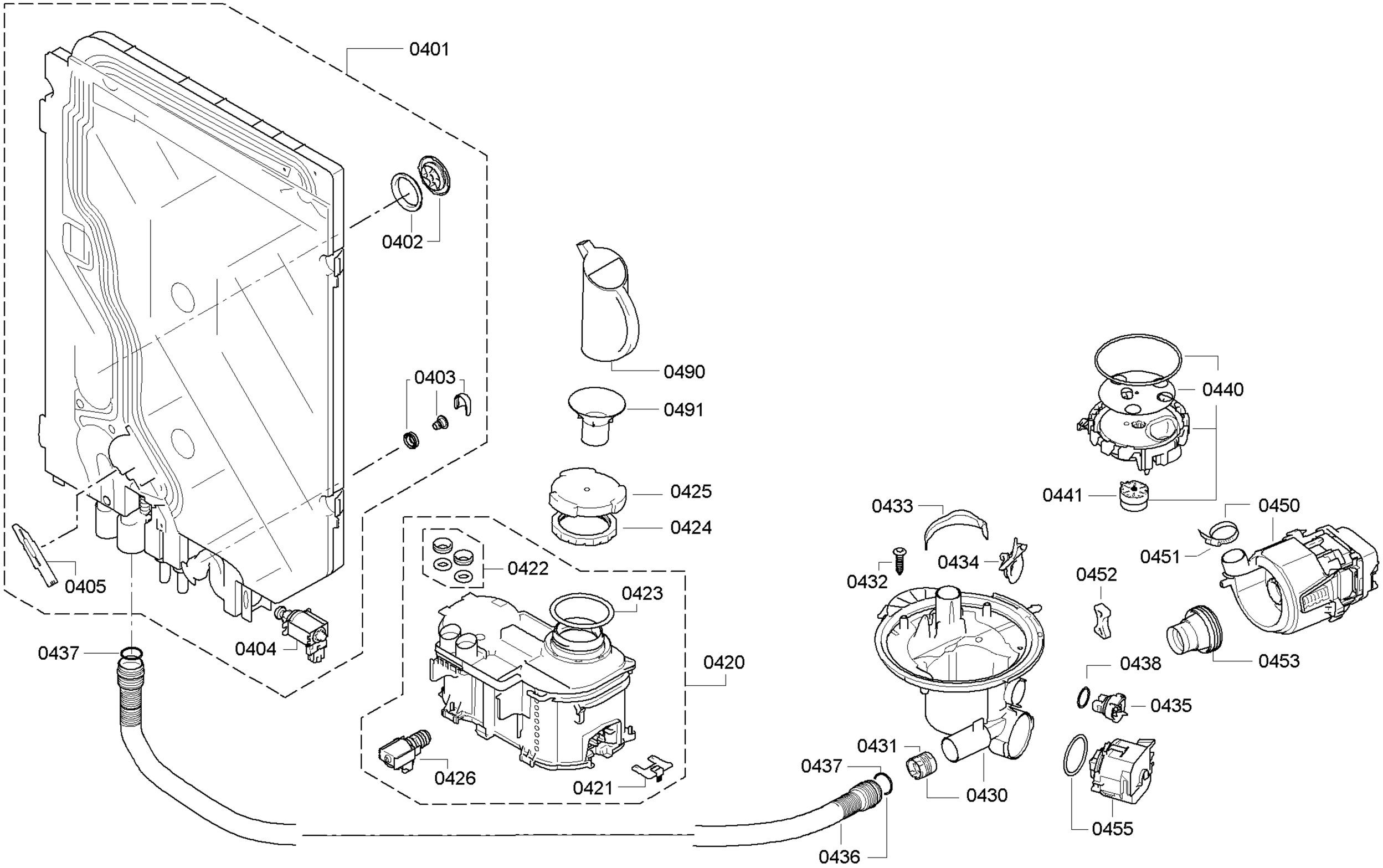

Copyright © (2012) by Balay / 205502

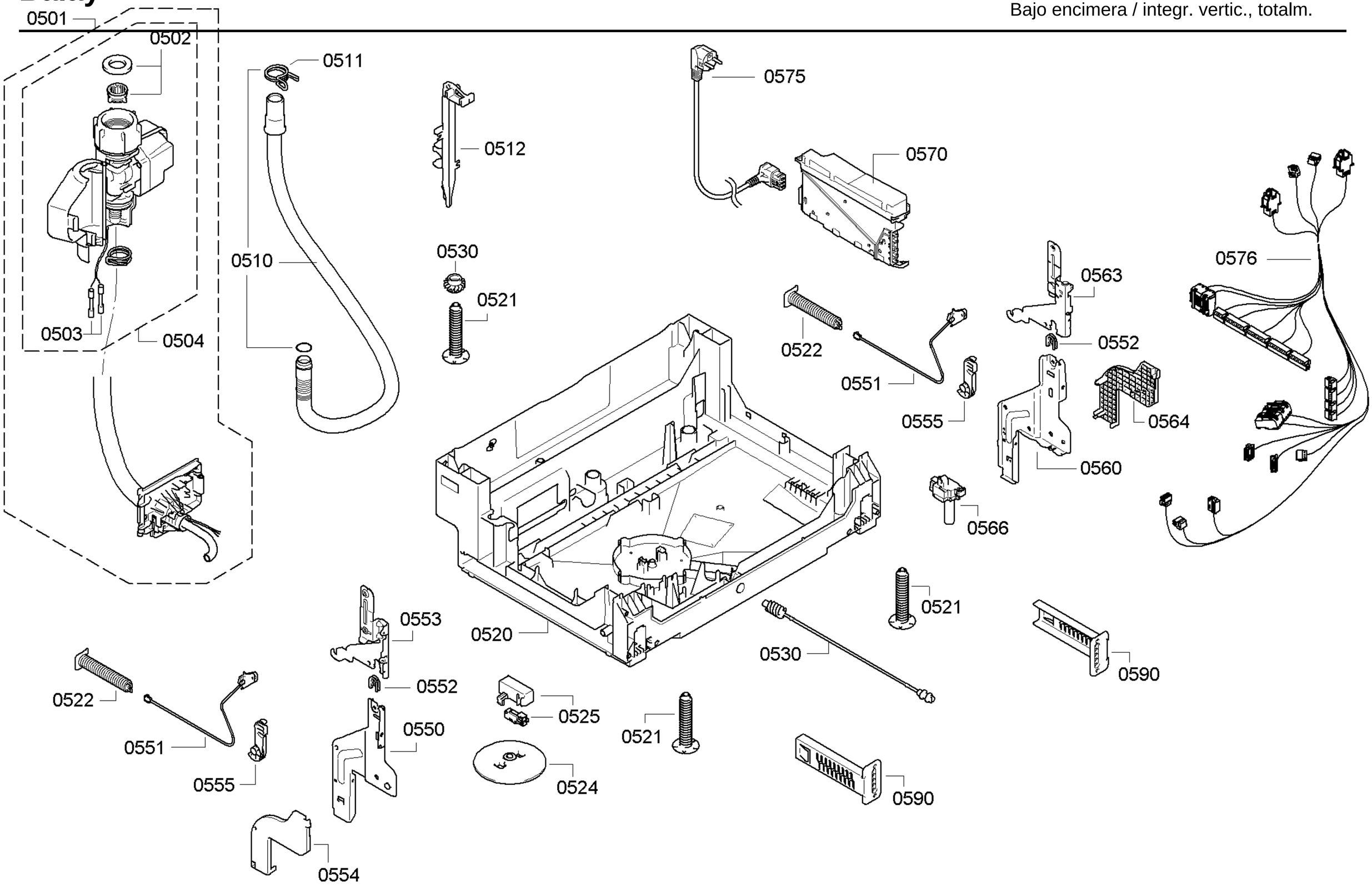

Copyright © (2012) by Balay / 205502

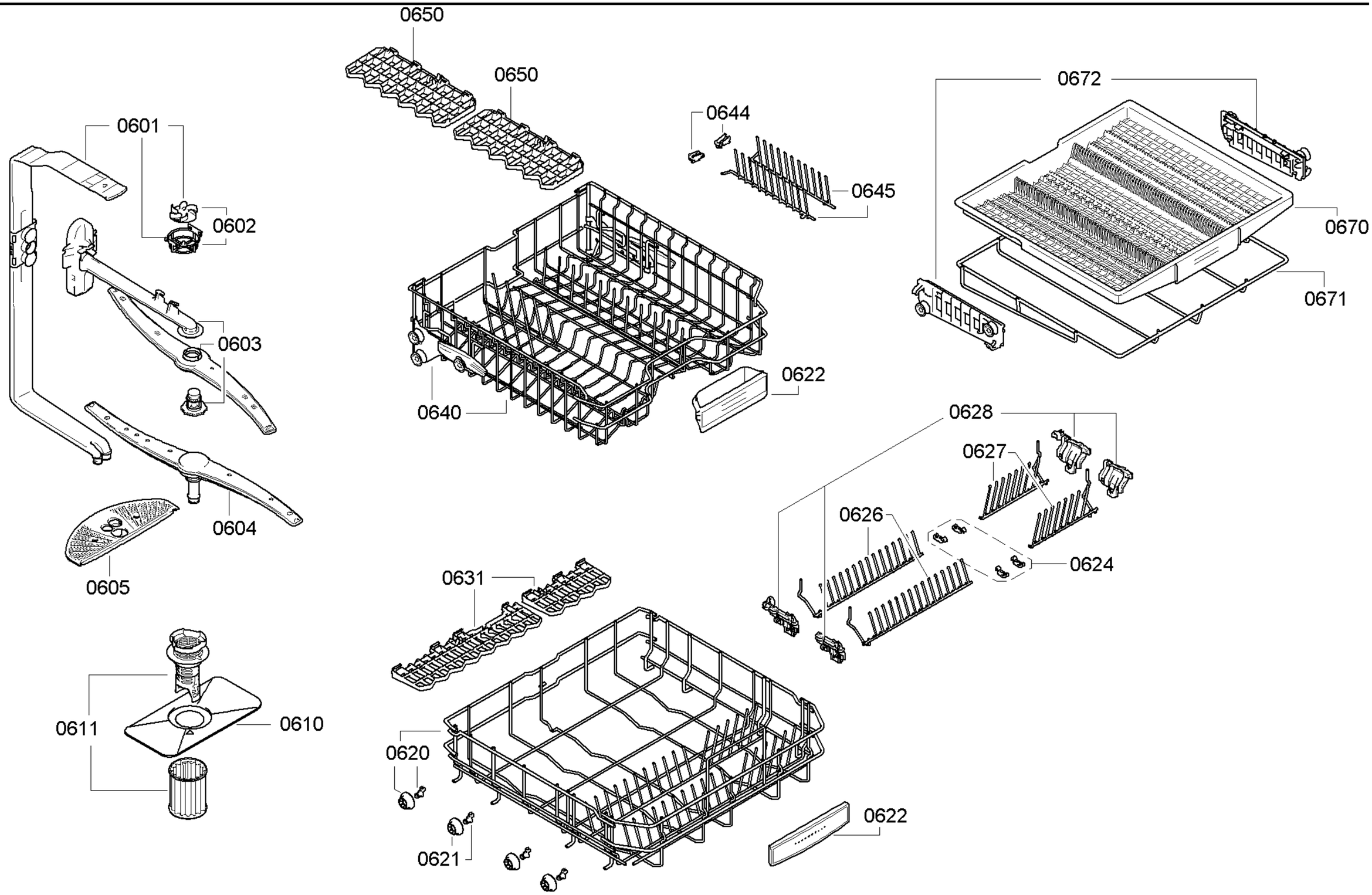

Copyright © (2012) by Balay / 205502