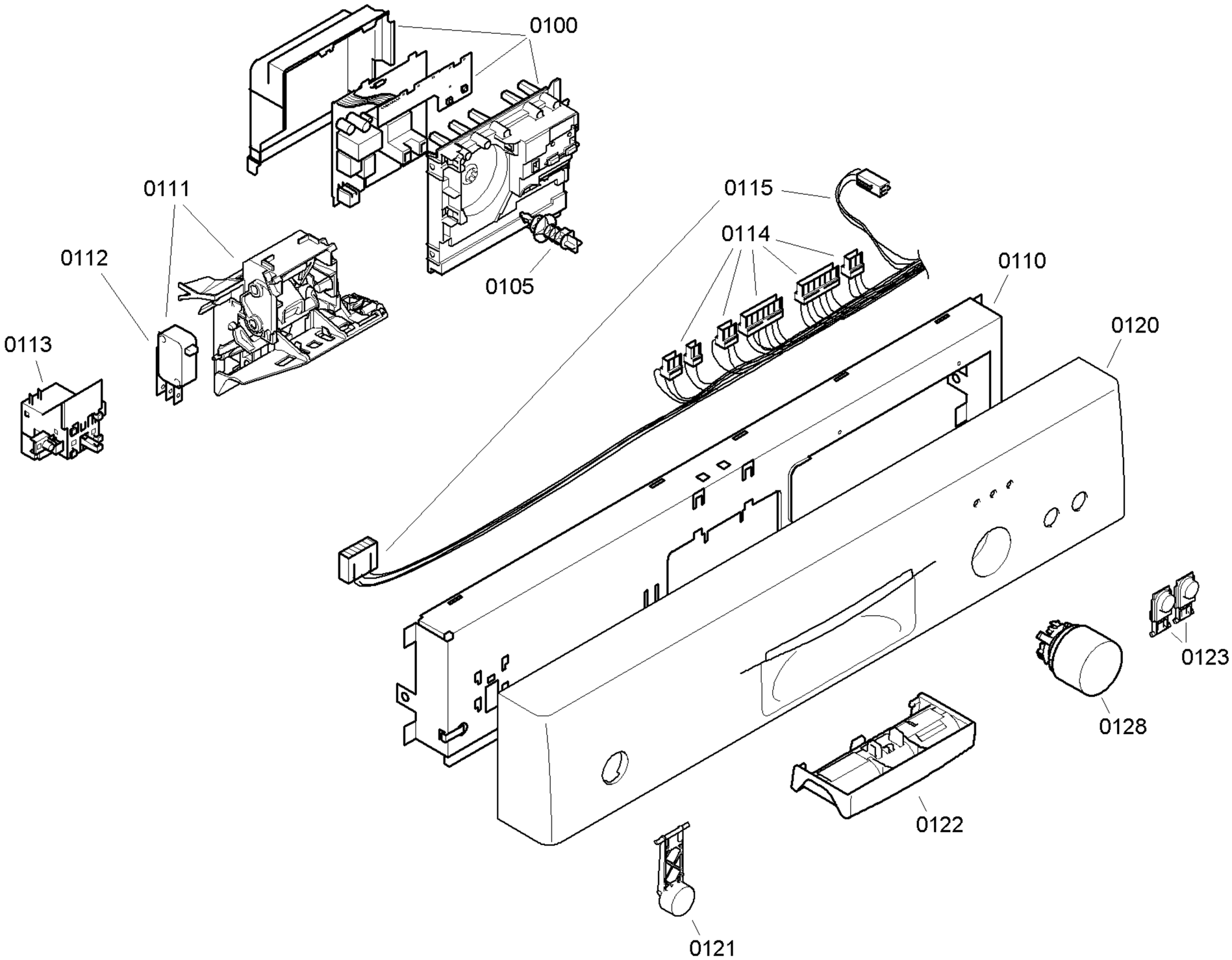

Copyright © (2015) by Balay / 205502

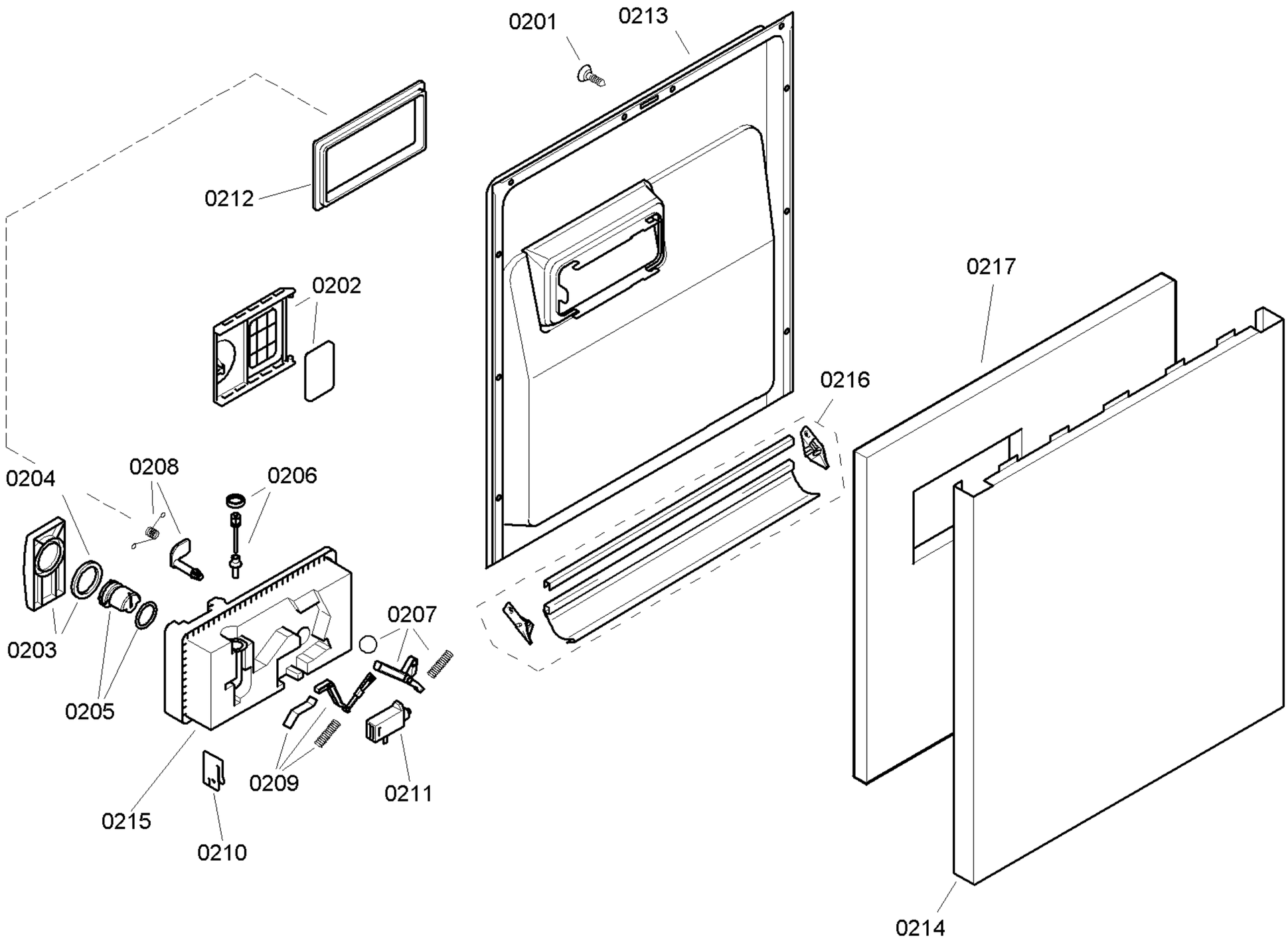

Copyright © (2015) by Balay / 205502

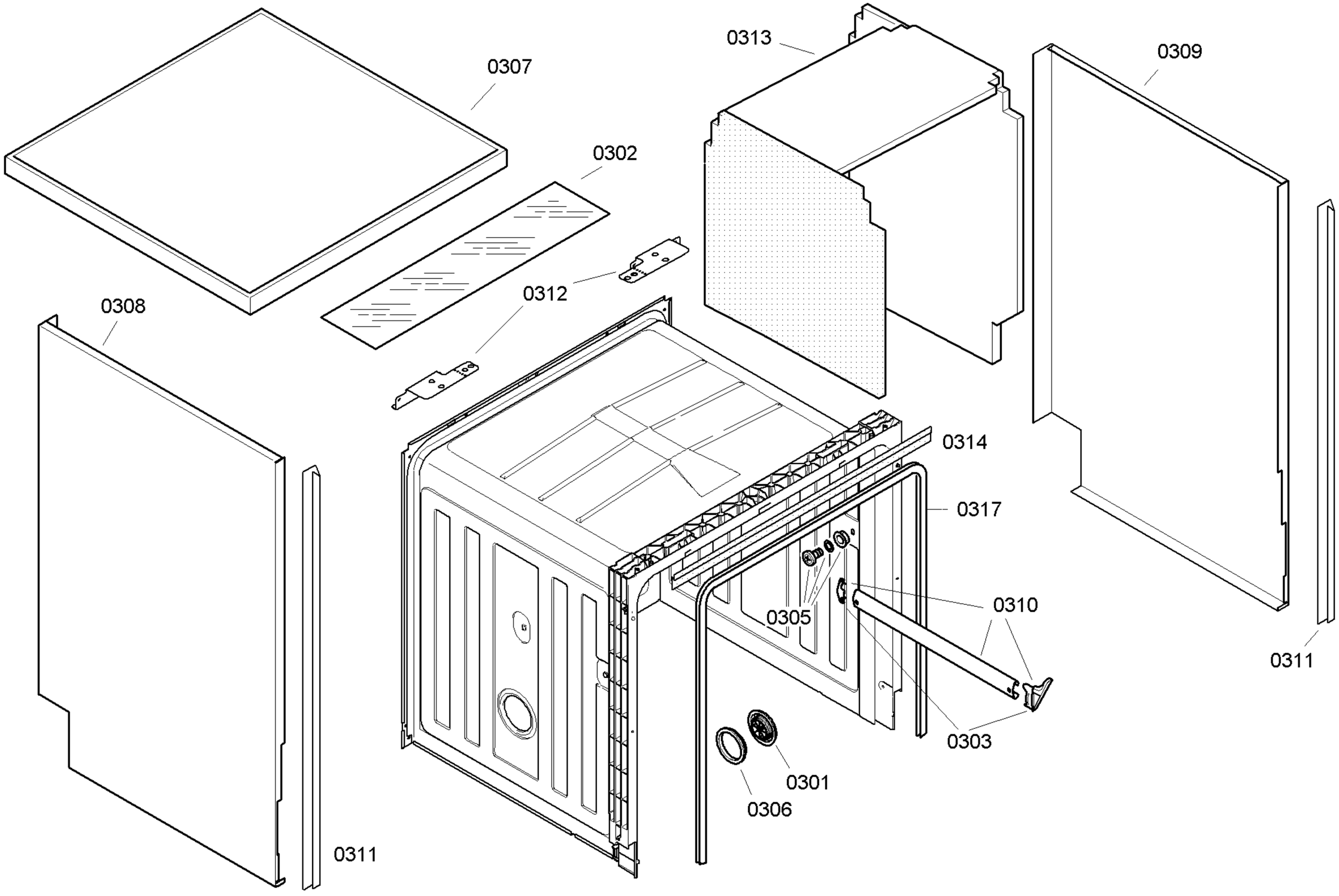

Copyright © (2015) by Balay / 205502

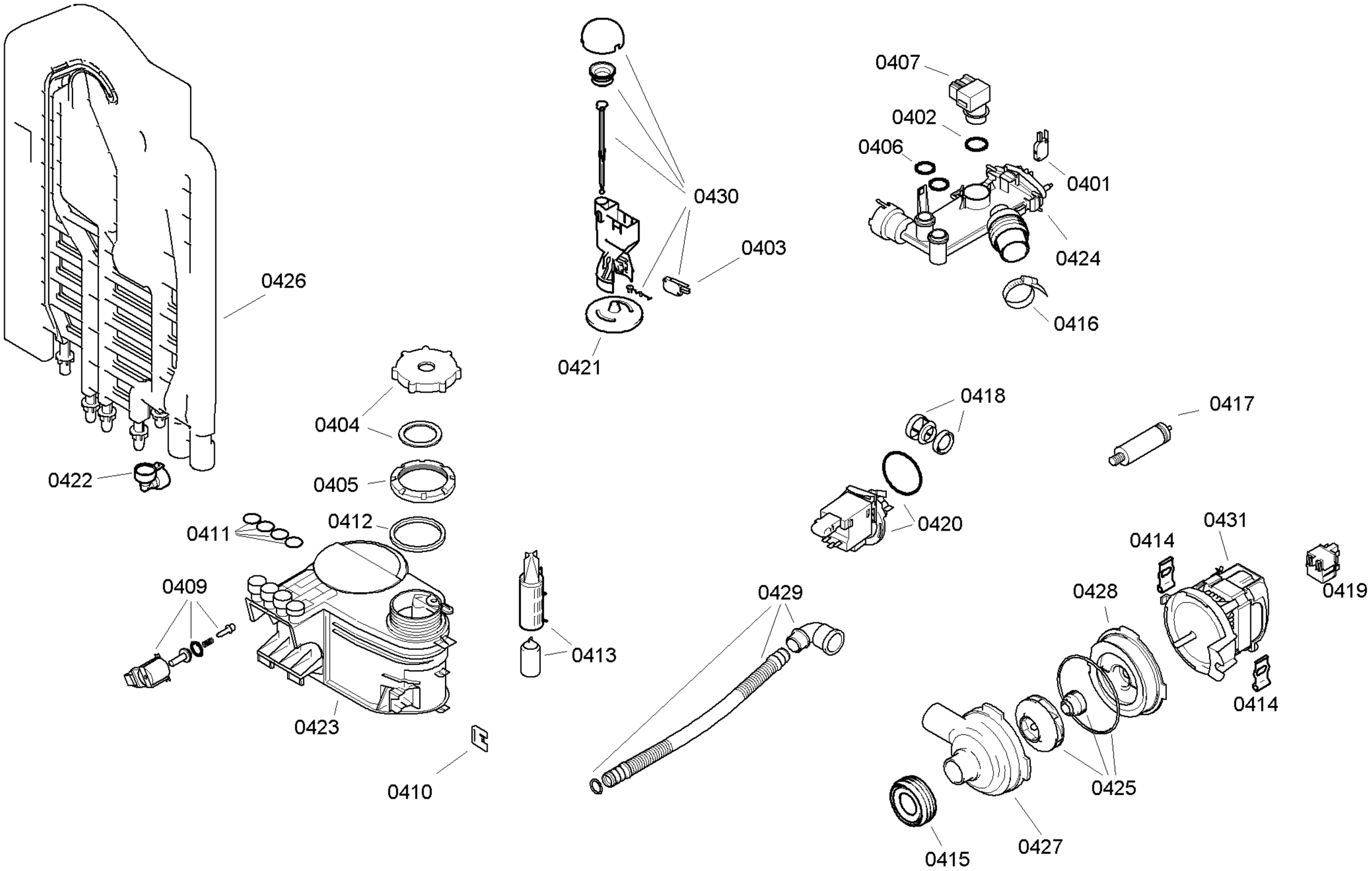

Copyright © (2015) by Balay / 205502

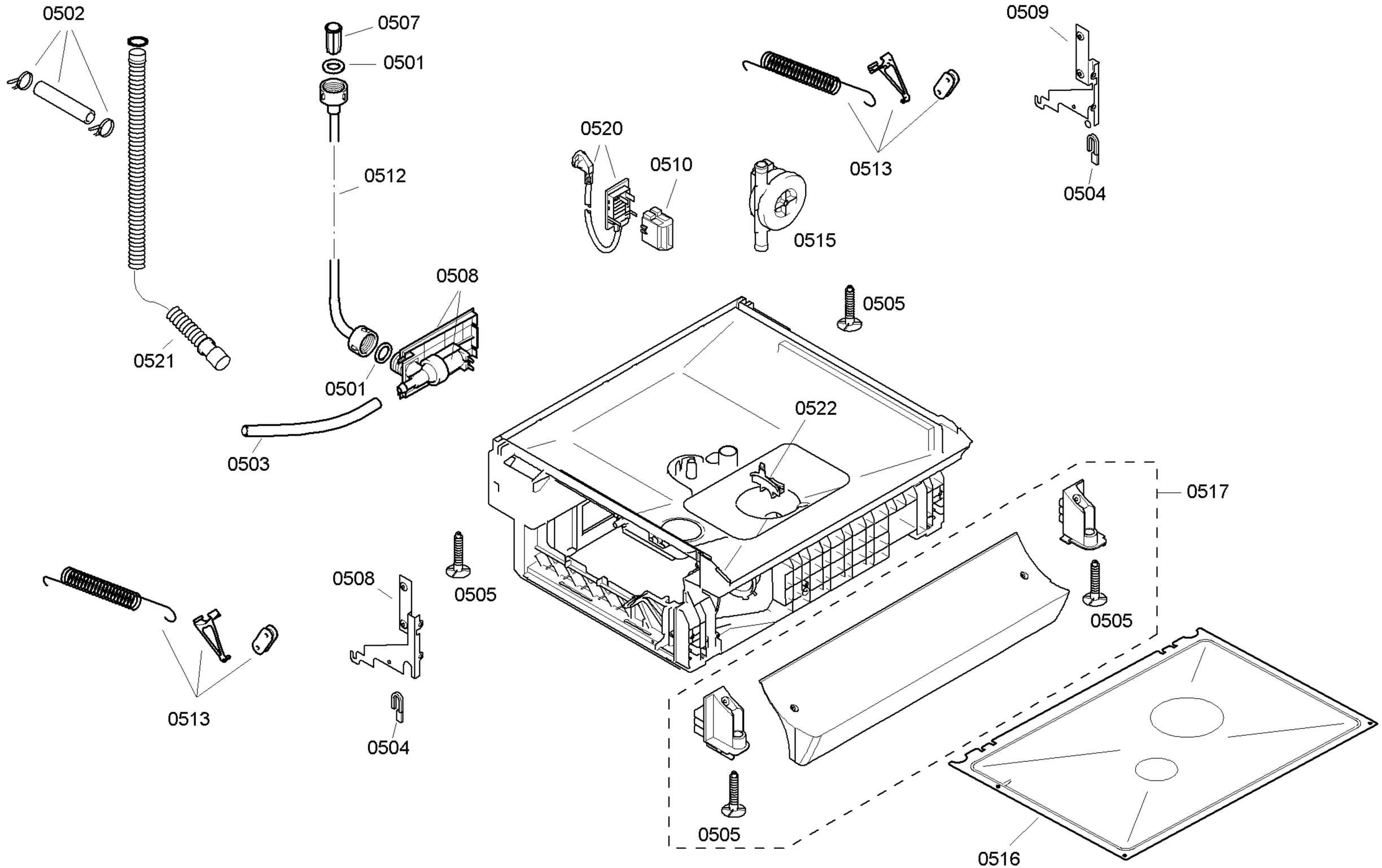

Copyright © (2015) by Balay / 205502

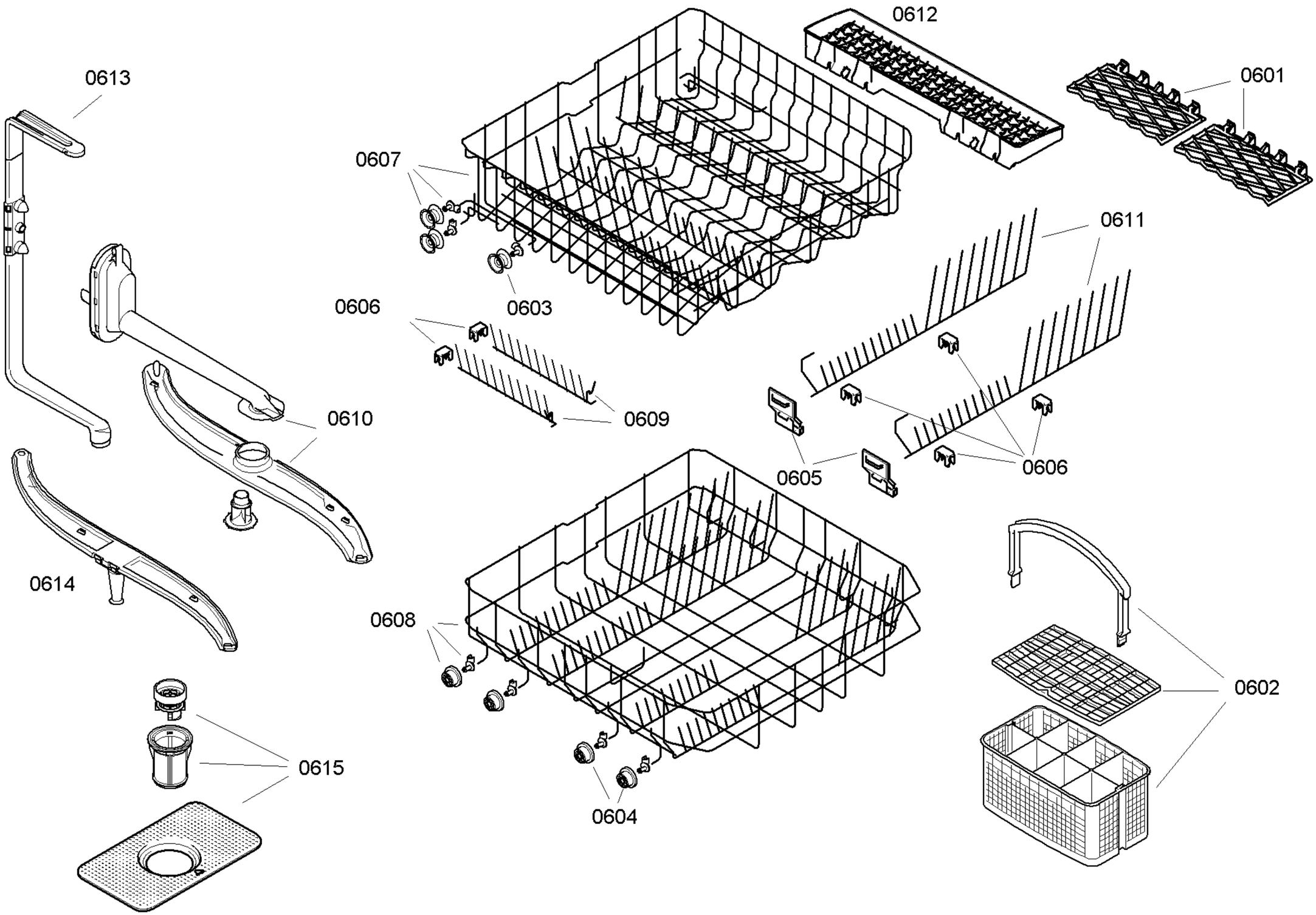

Copyright © (2015) by Balay / 205502