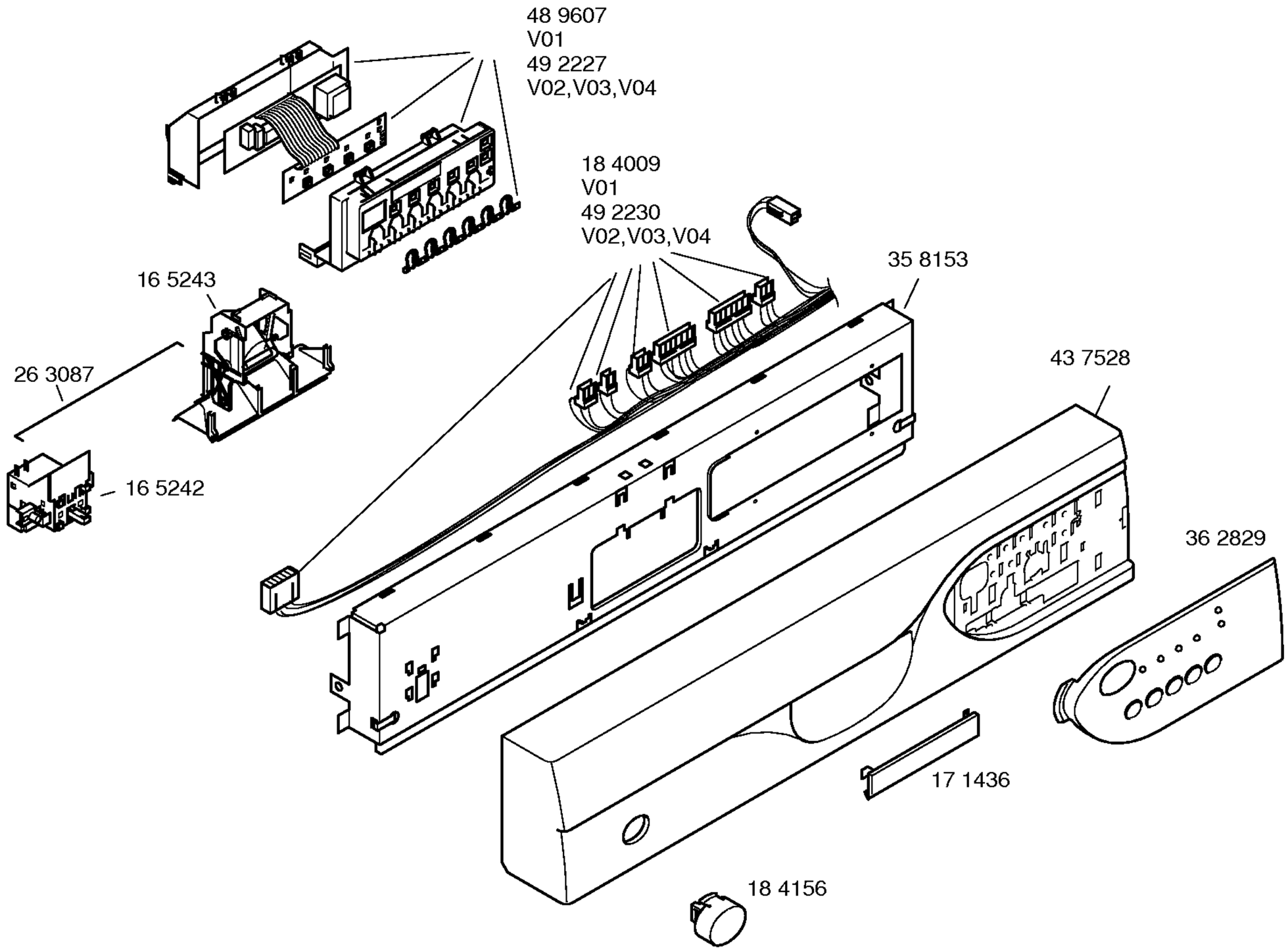

Libro de instrucciones
58 8426
es,pt
Instrucciones breves
58 7944
es
58 7945
pt

ex60303-6/1

Copyright © (2020) by Balay / 205502

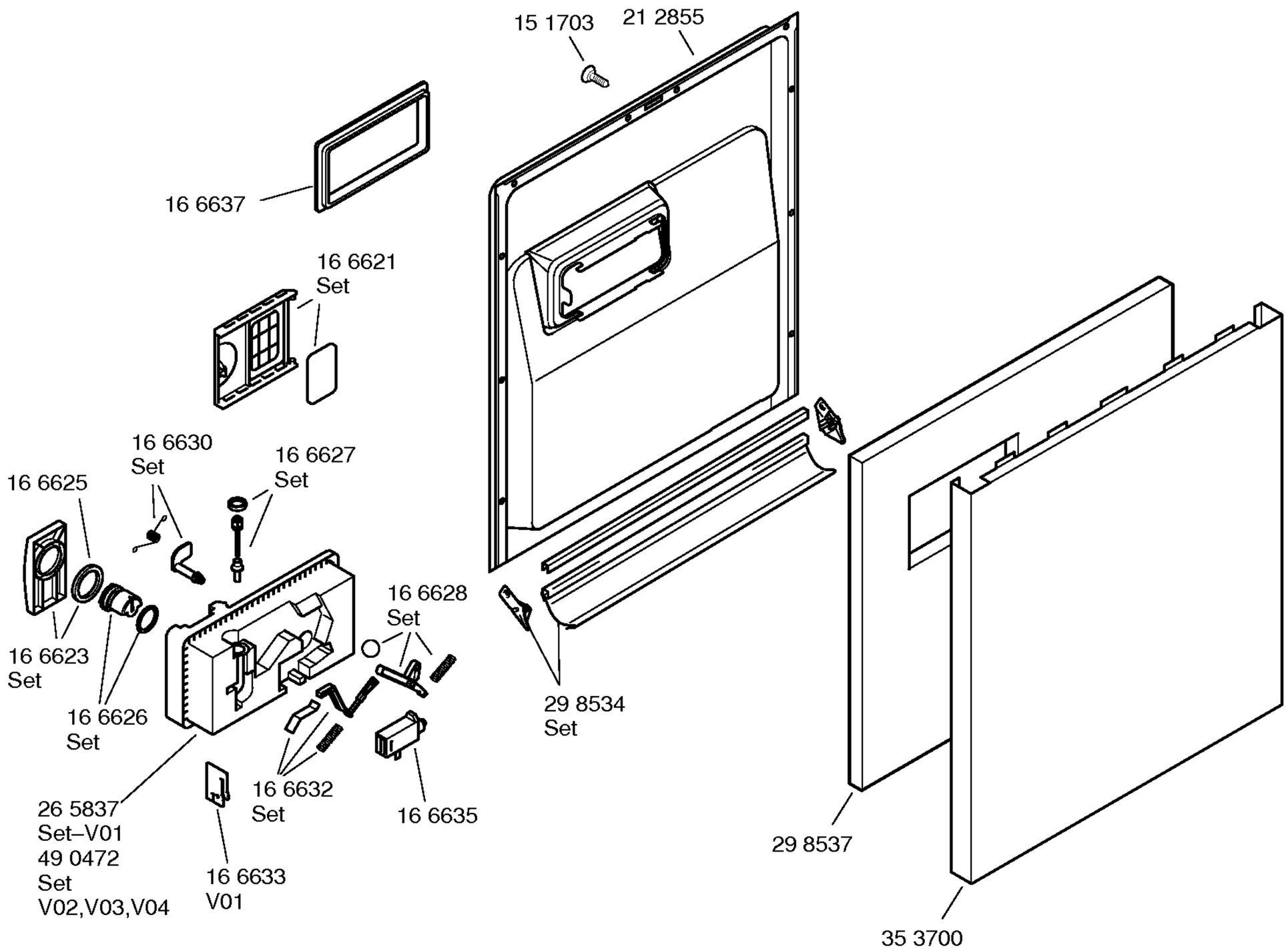

ex60303-6/2

Copyright © (2020) by Balay / 205502

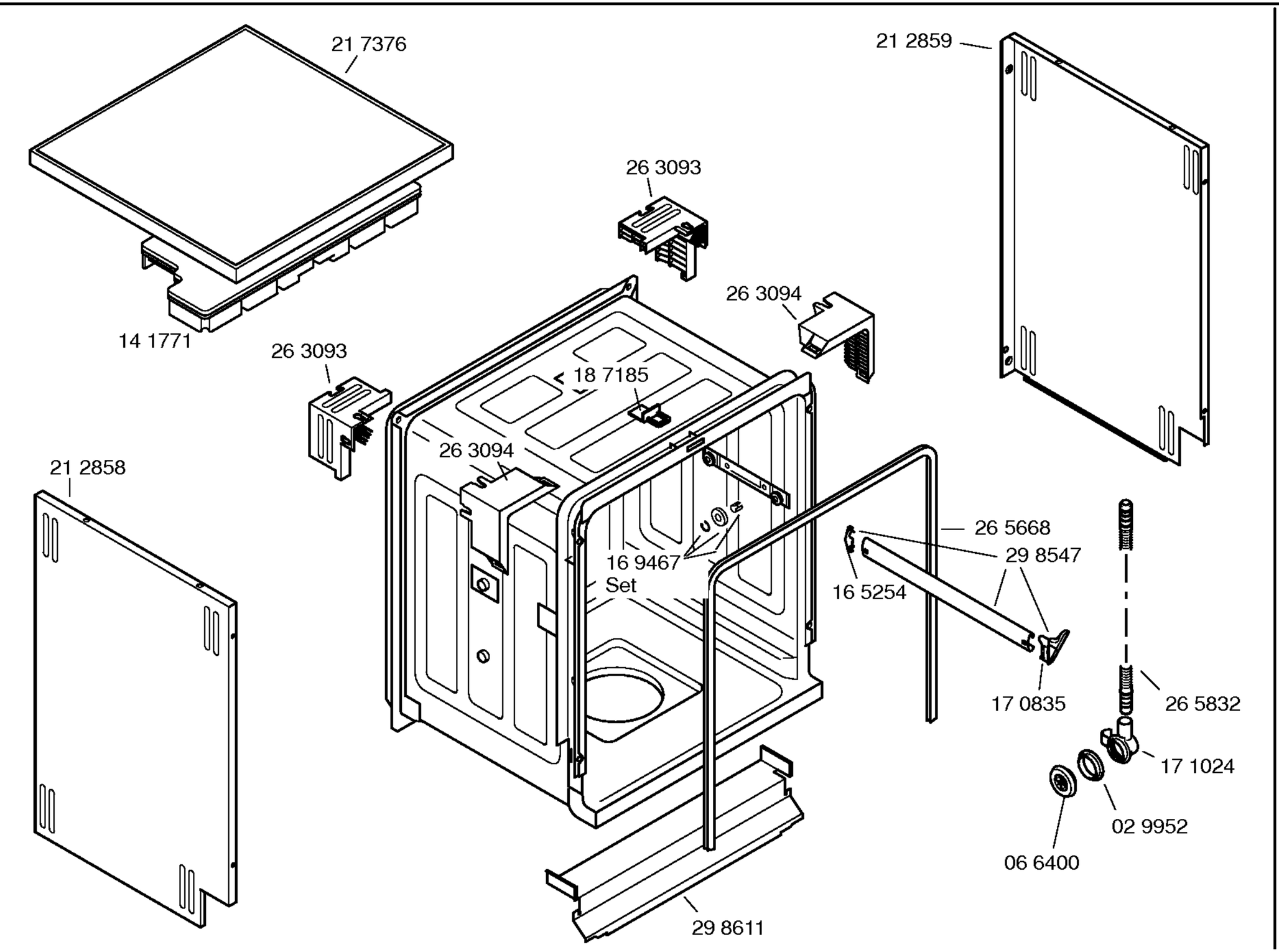

ex60303-6/3

Copyright © (2020) by Balay / 205502

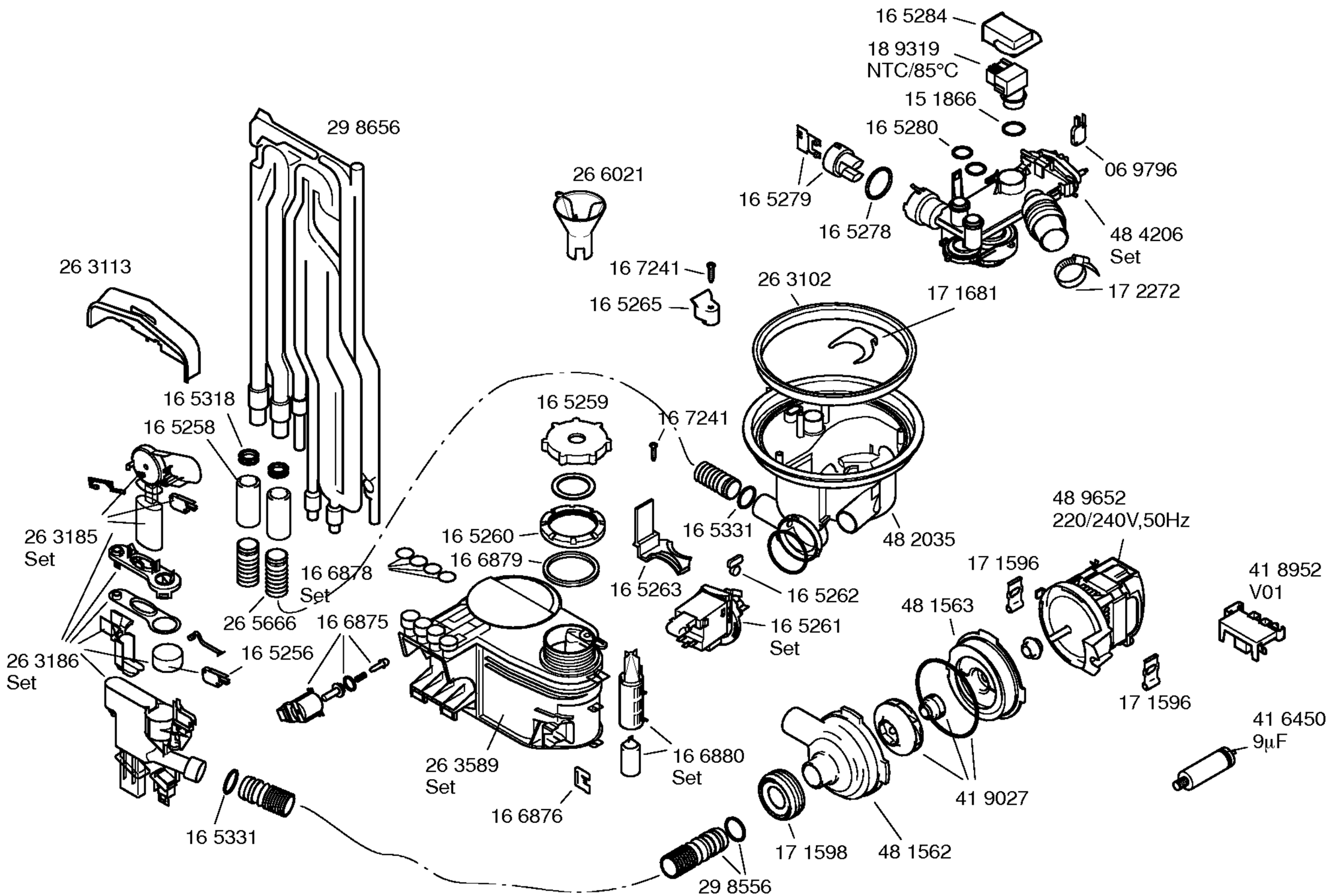

ex60303 -6/4

Copyright © (2020) by Balay / 205502

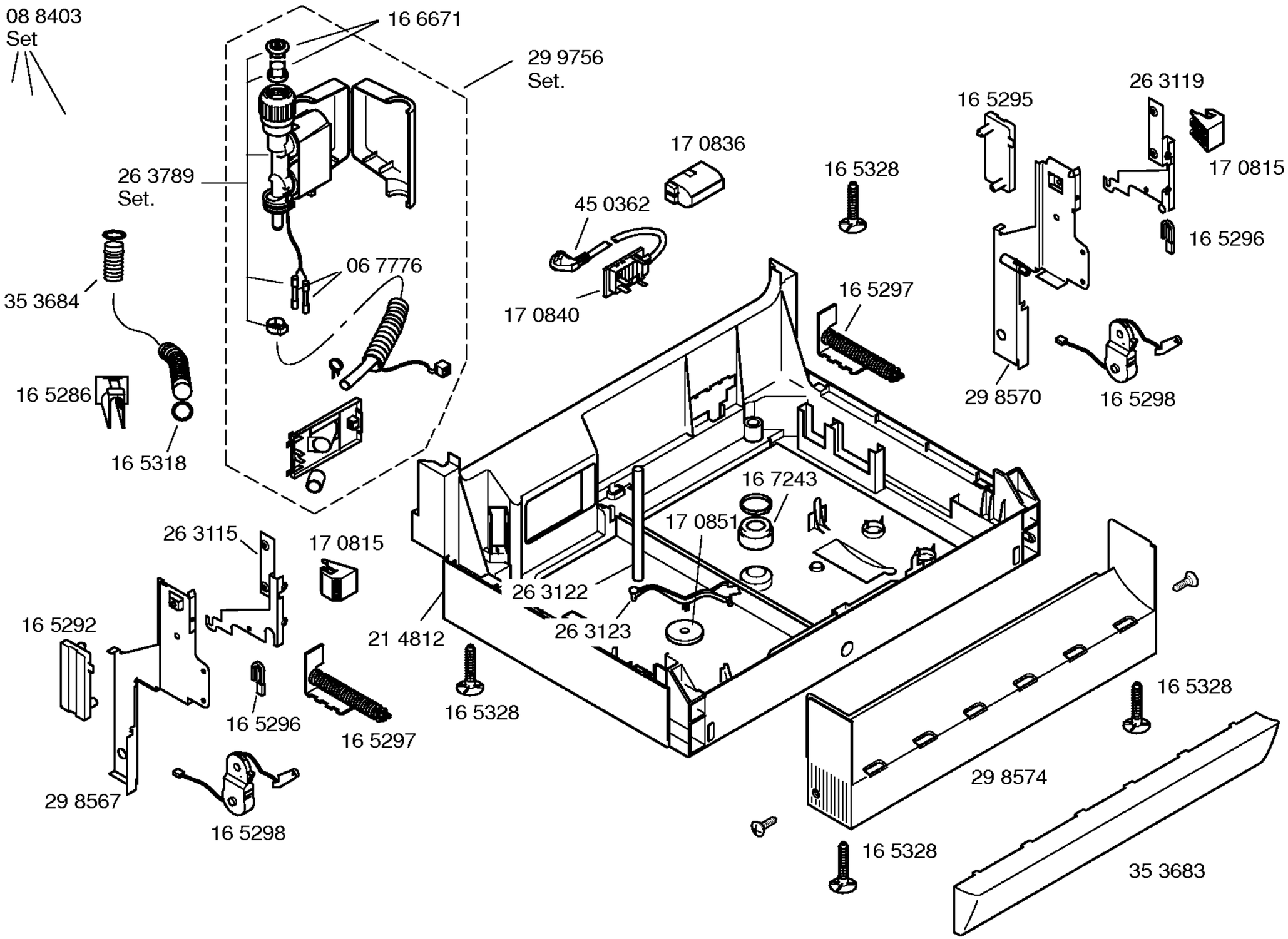

Copyright © (2020) by Balay / 205502

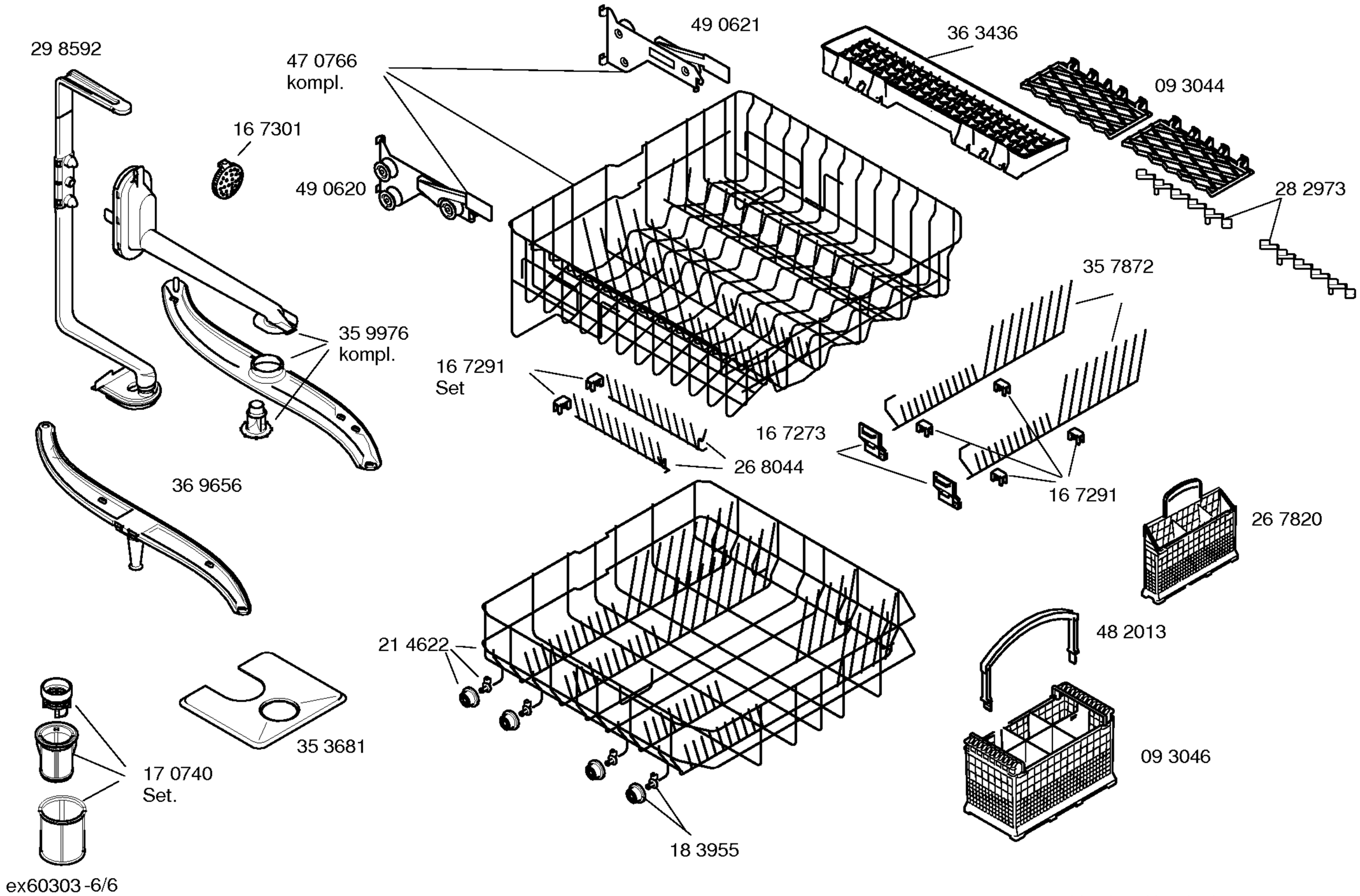

Copyright © (2020) by Balay / 205502