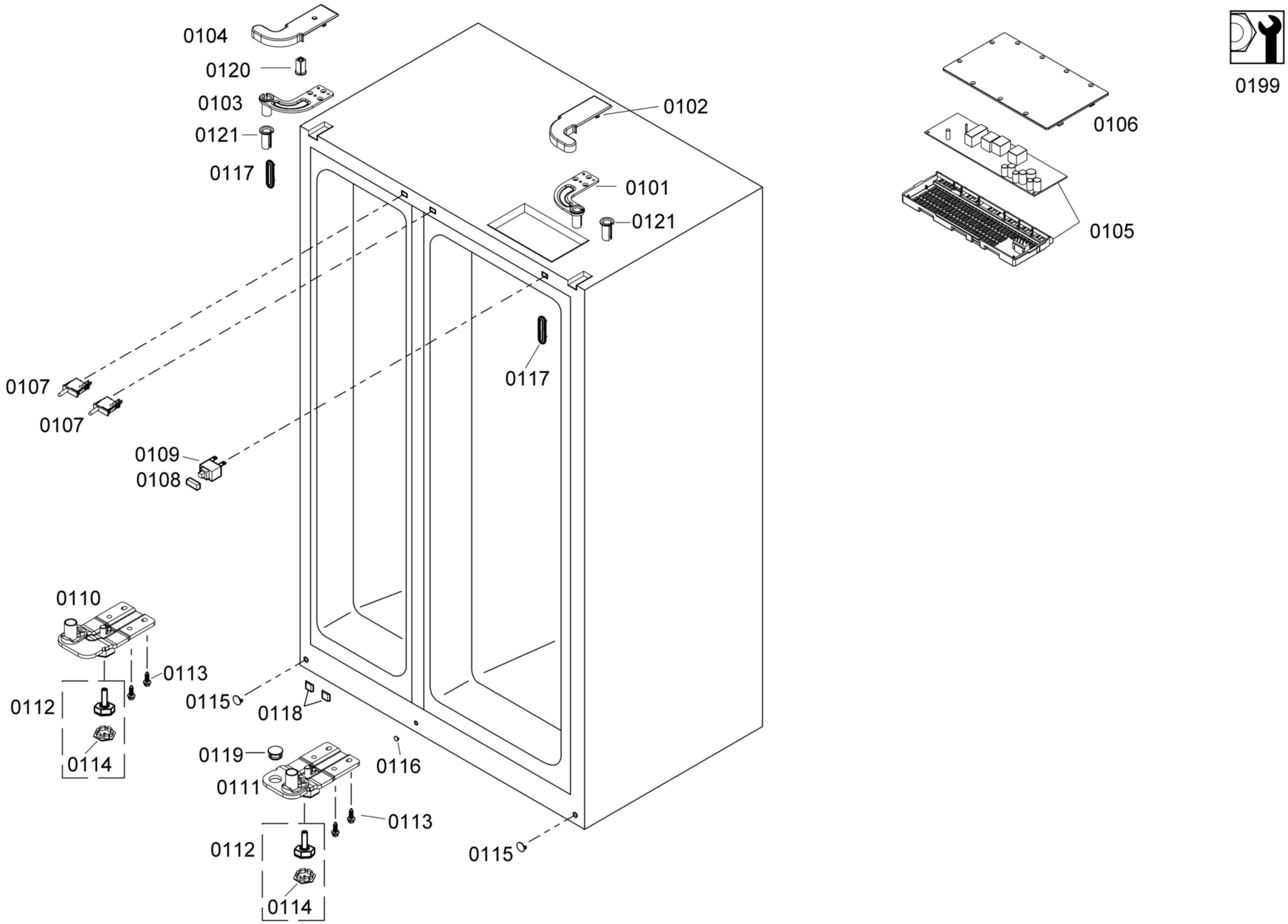

Copyright © (2012) by Bosch / SERDE_BEYER-HIESCH

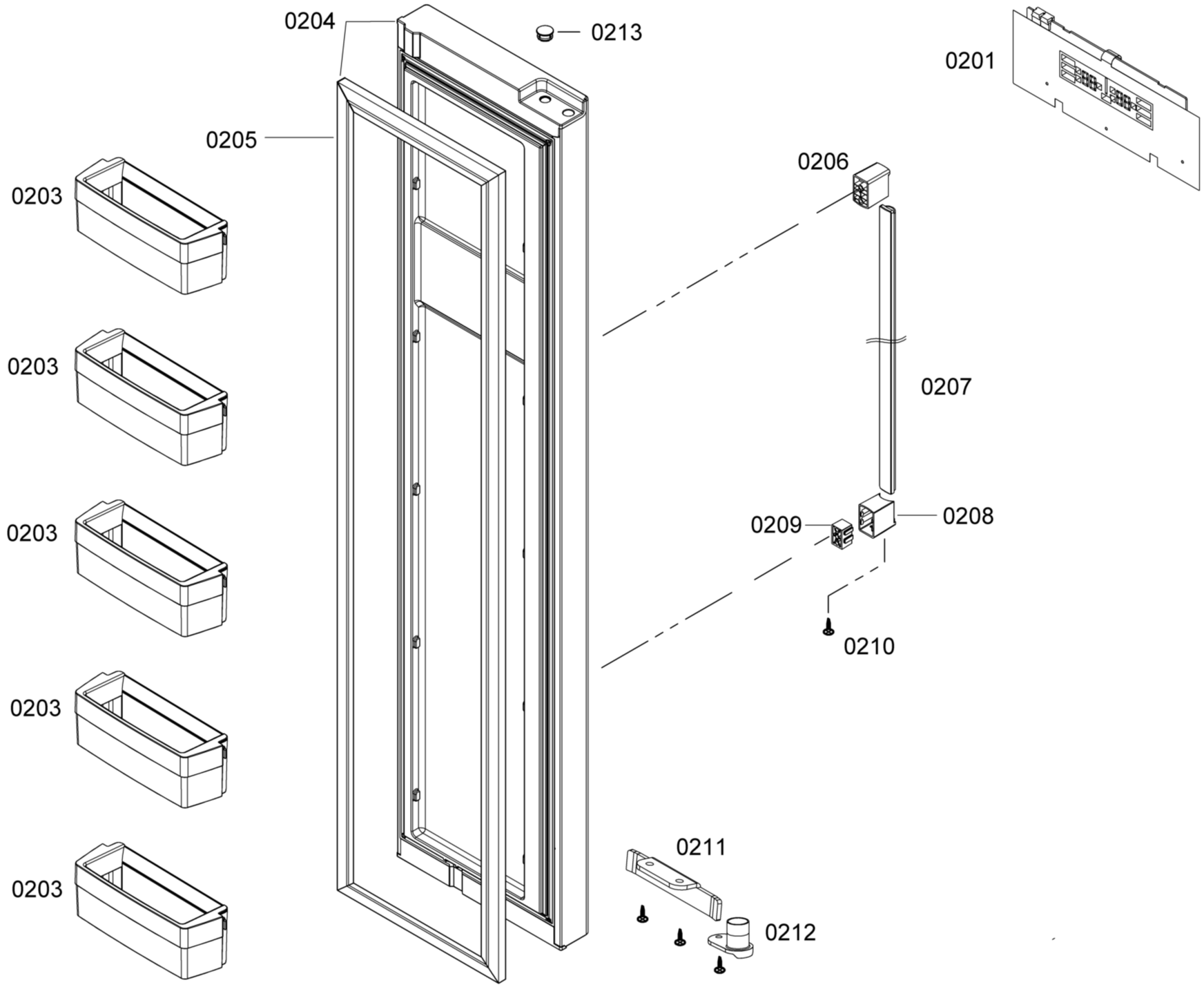

Copyright © (2012) by Bosch / SERDE_BEYER-HIESCH

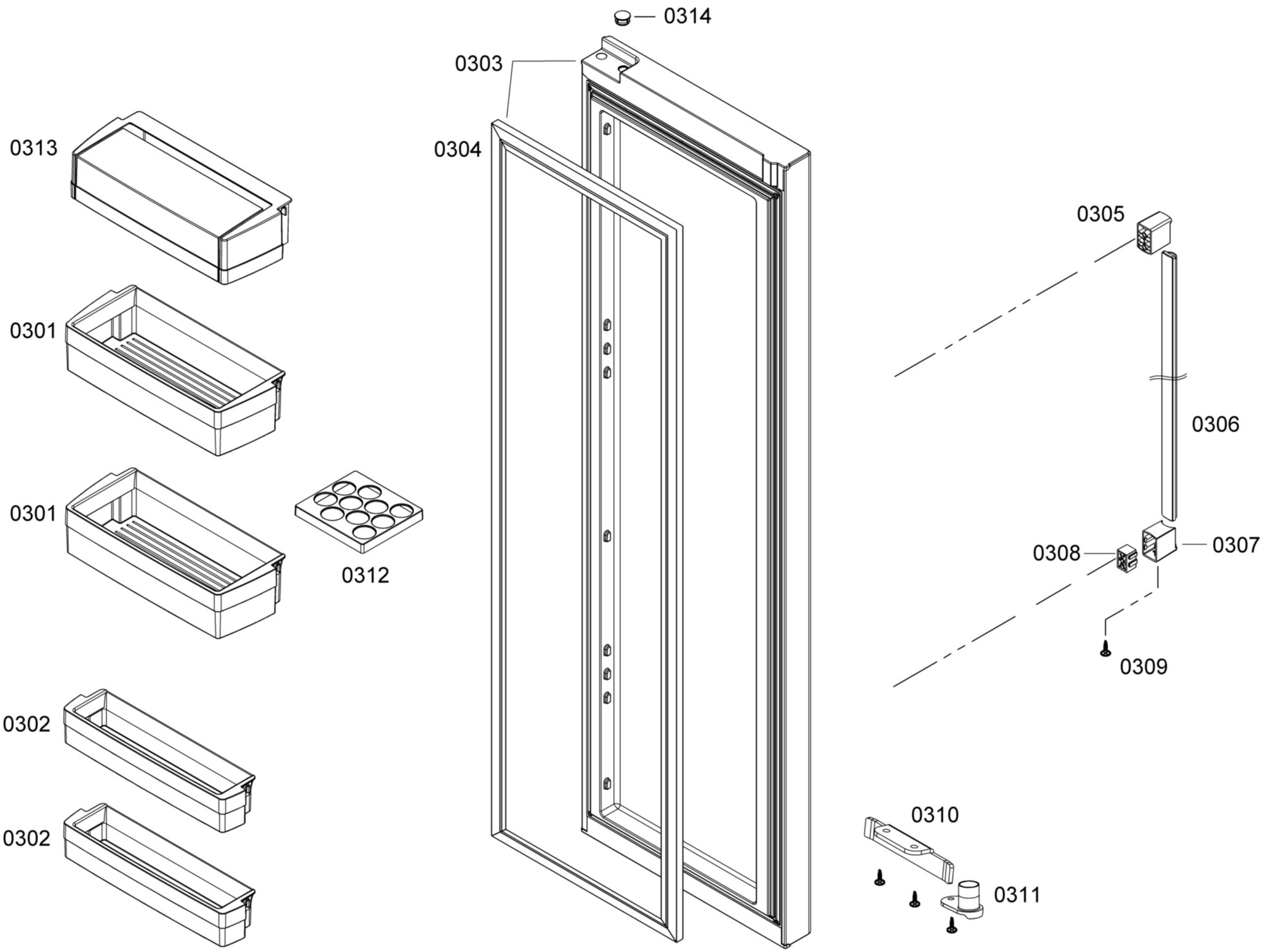

Copyright © (2012) by Bosch / SERDE_BEYER-HIESCH

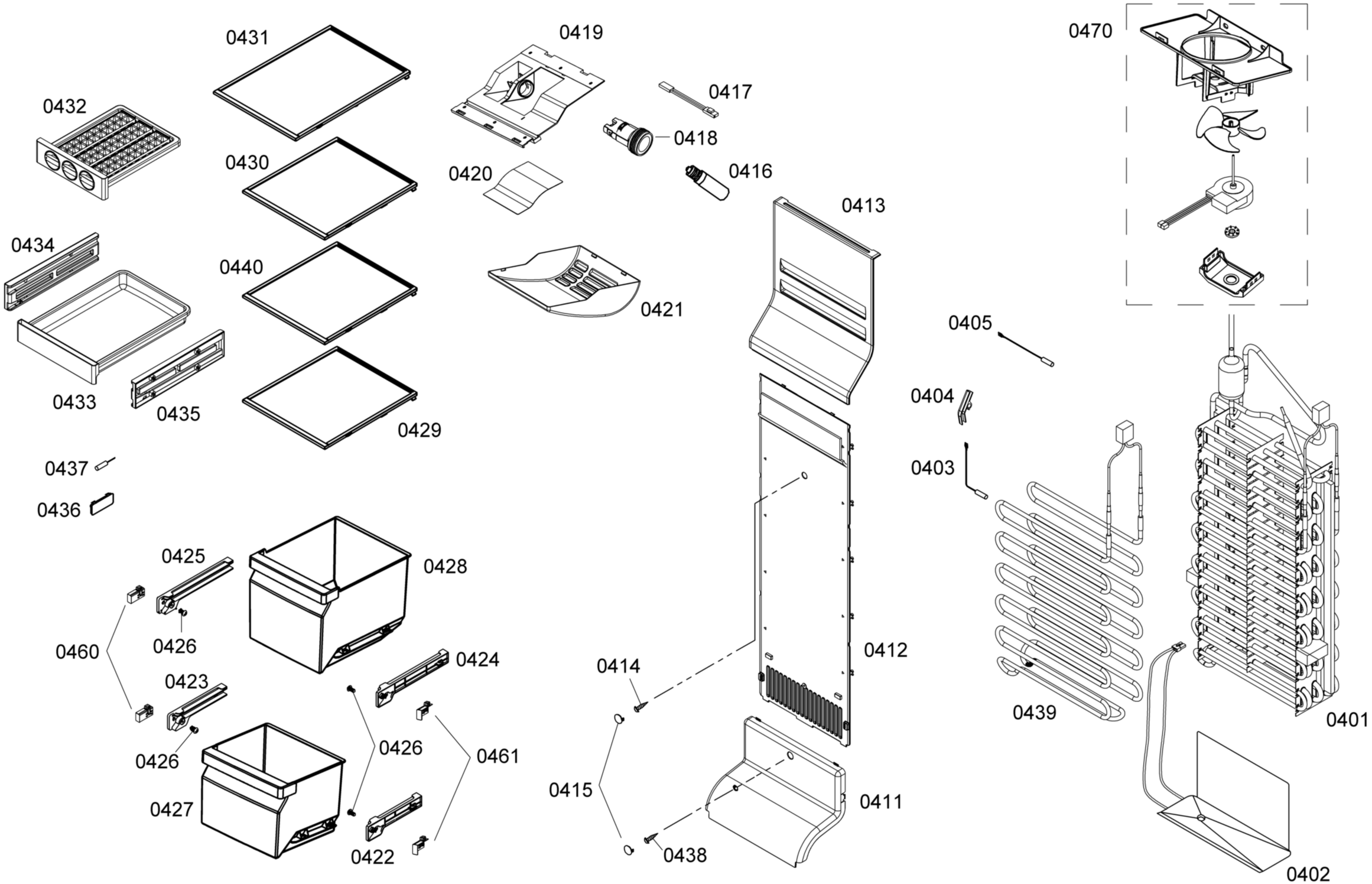

Copyright © (2012) by Bosch / SERDE_BEYER-HIESCH

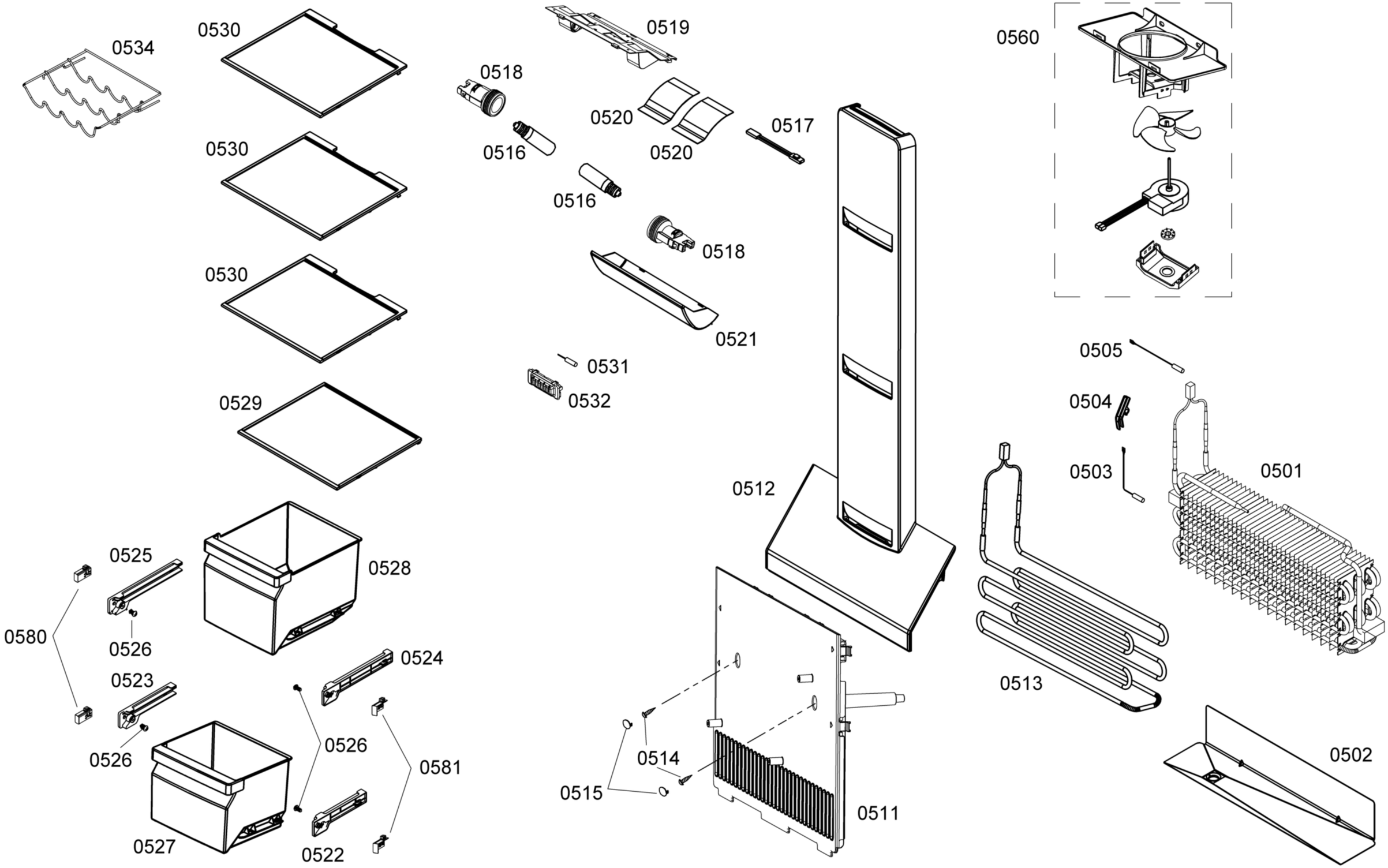

Copyright © (2012) by Bosch / SERDE_BEYER-HIESCH

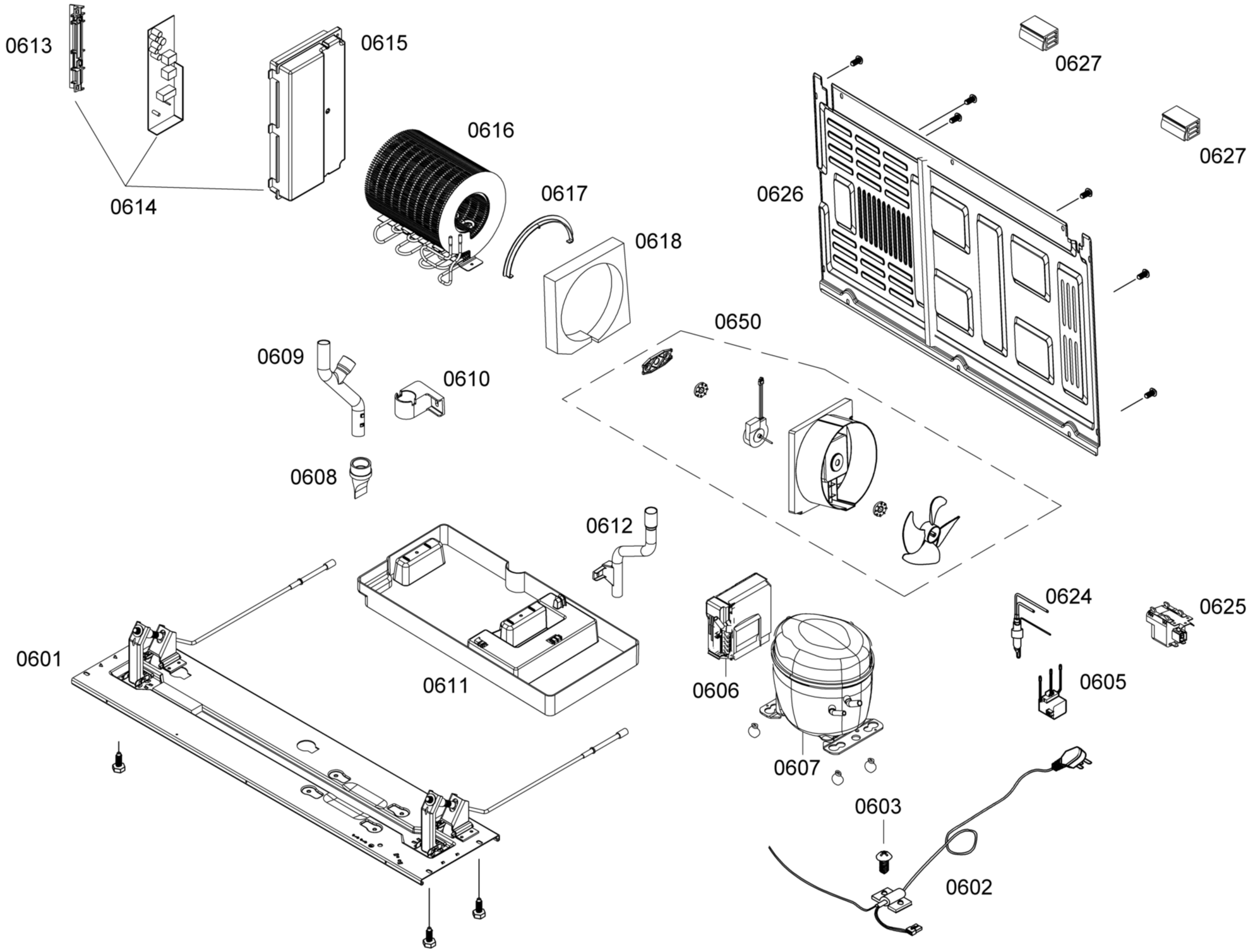

Copyright © (2012) by Bosch / SERDE_BEYER-HIESCH