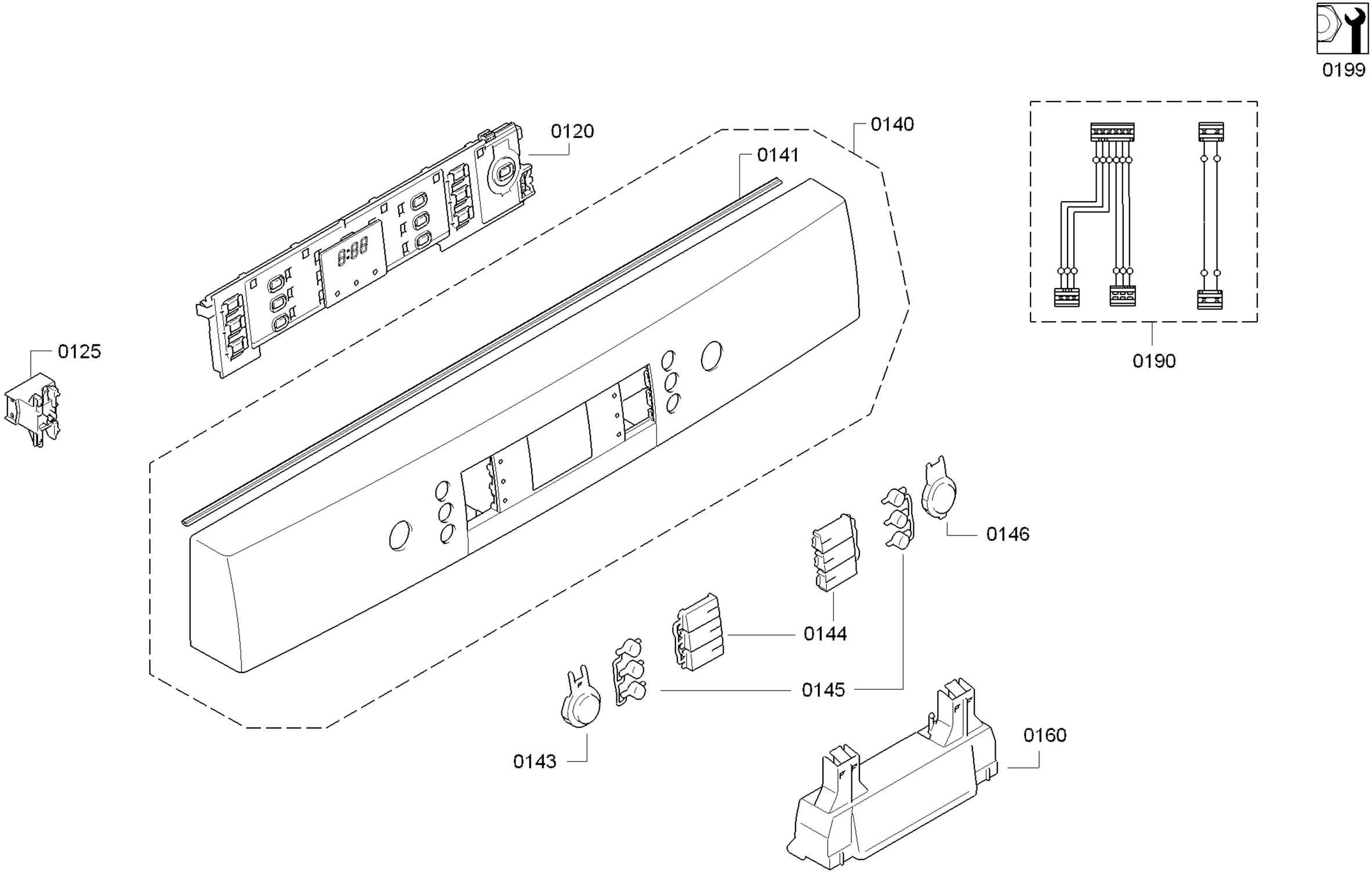

58300000187414 aet 001 b

Copyright © (2023) by Bosch / 205502

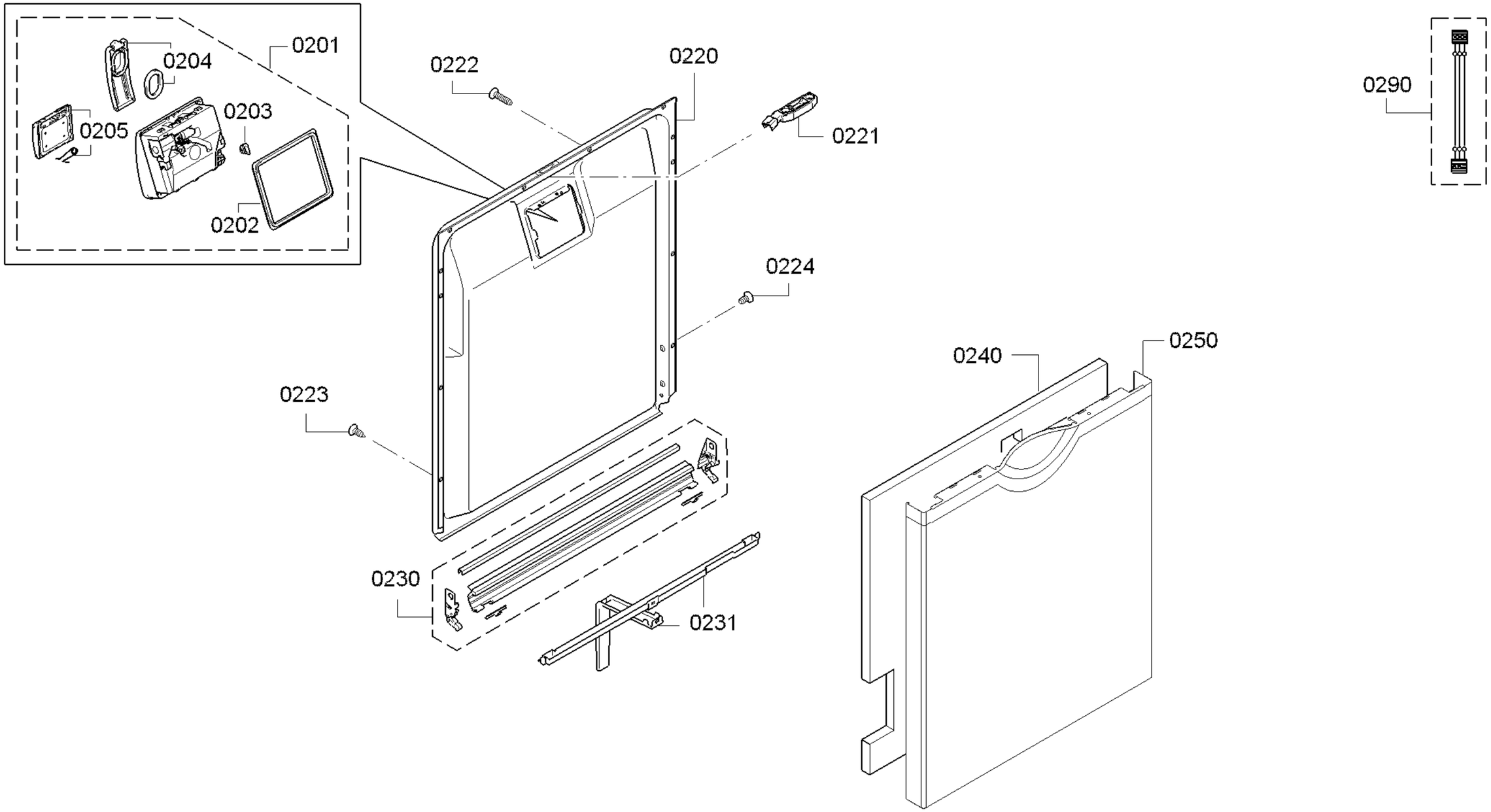

Copyright © (2023) by Bosch / 205502

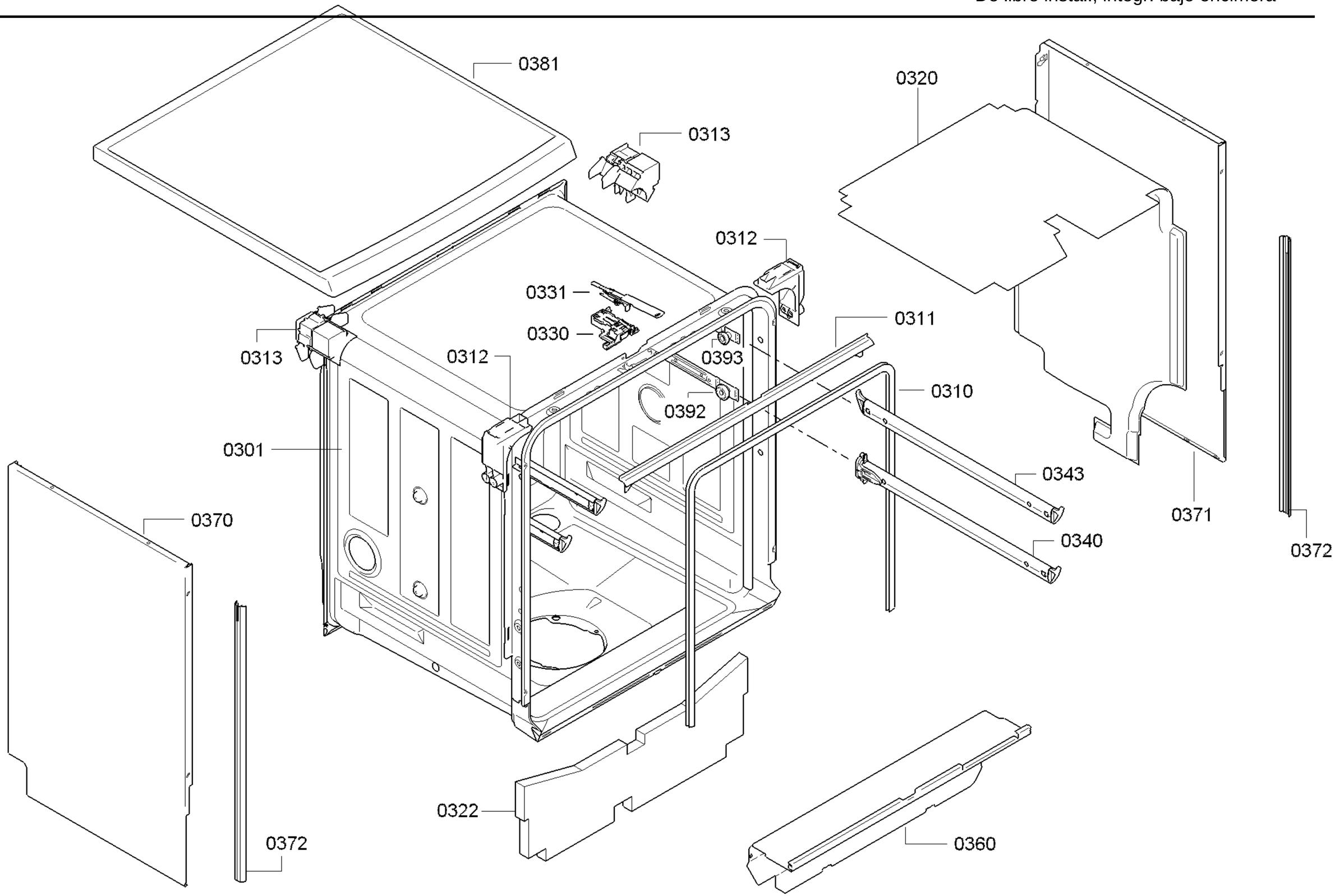

58300000187585 aet 003 b

Copyright © (2023) by Bosch / 205502

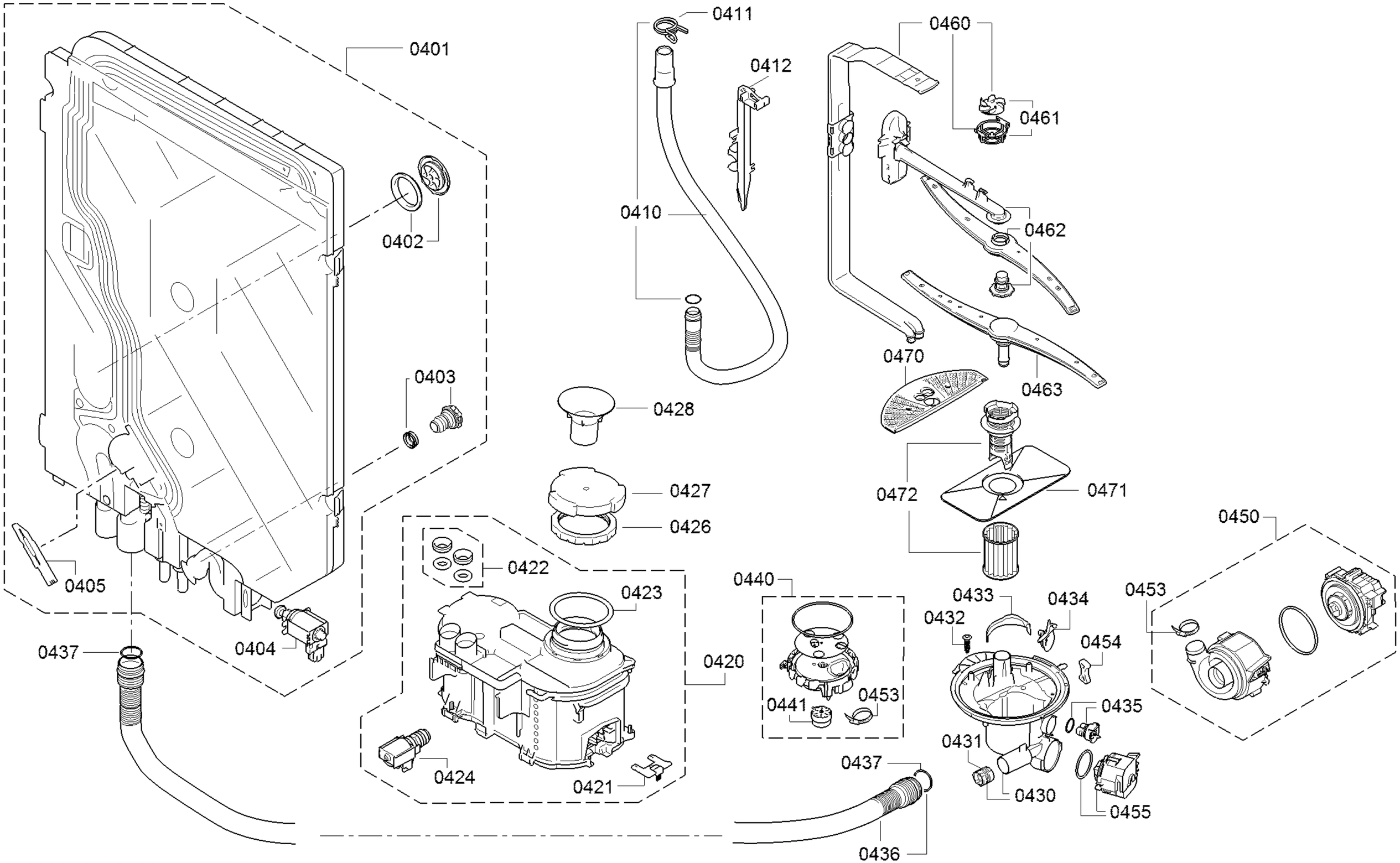

58300000187602 aet 004 f

Copyright © (2023) by Bosch / 205502

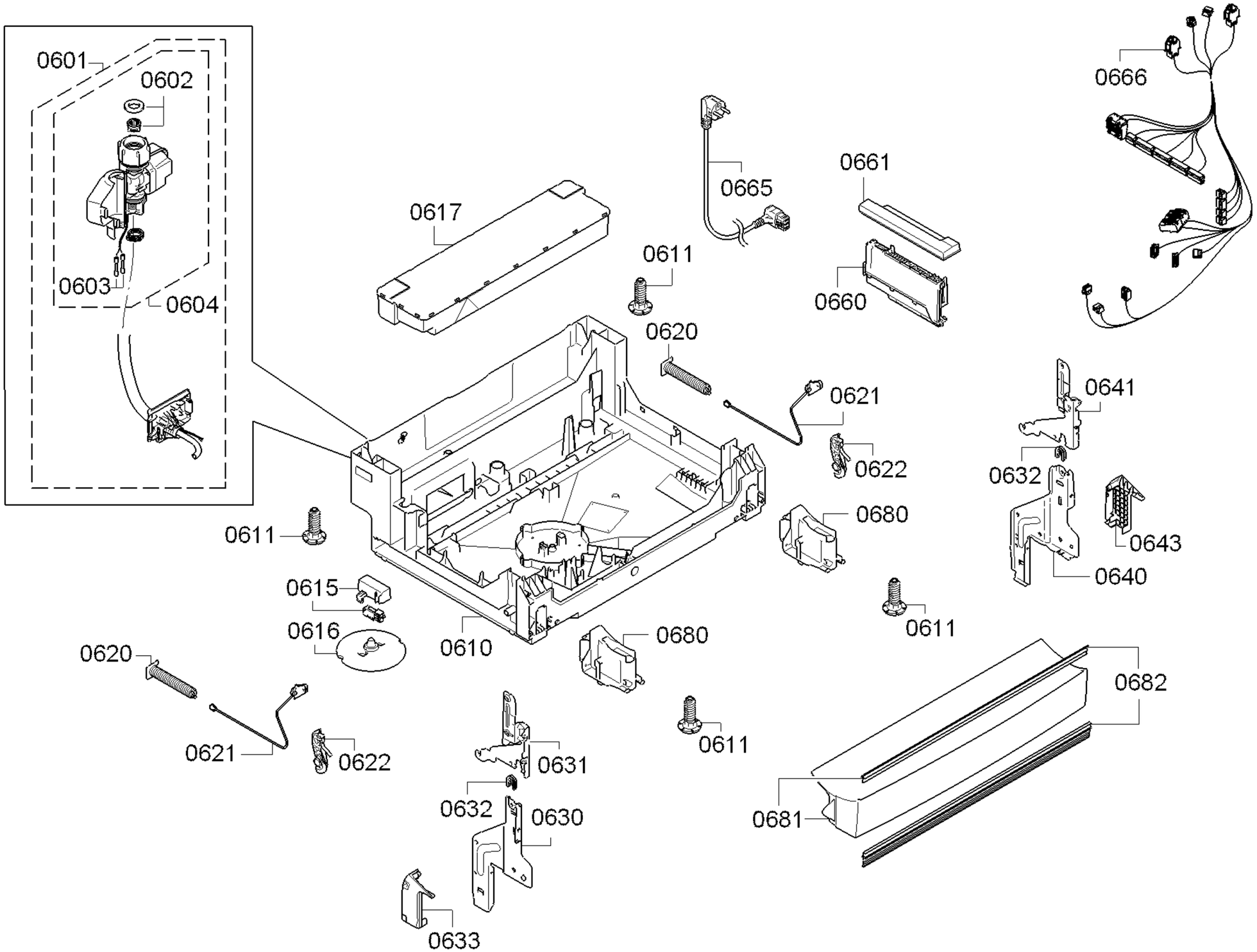

Copyright © (2023) by Bosch / 205502

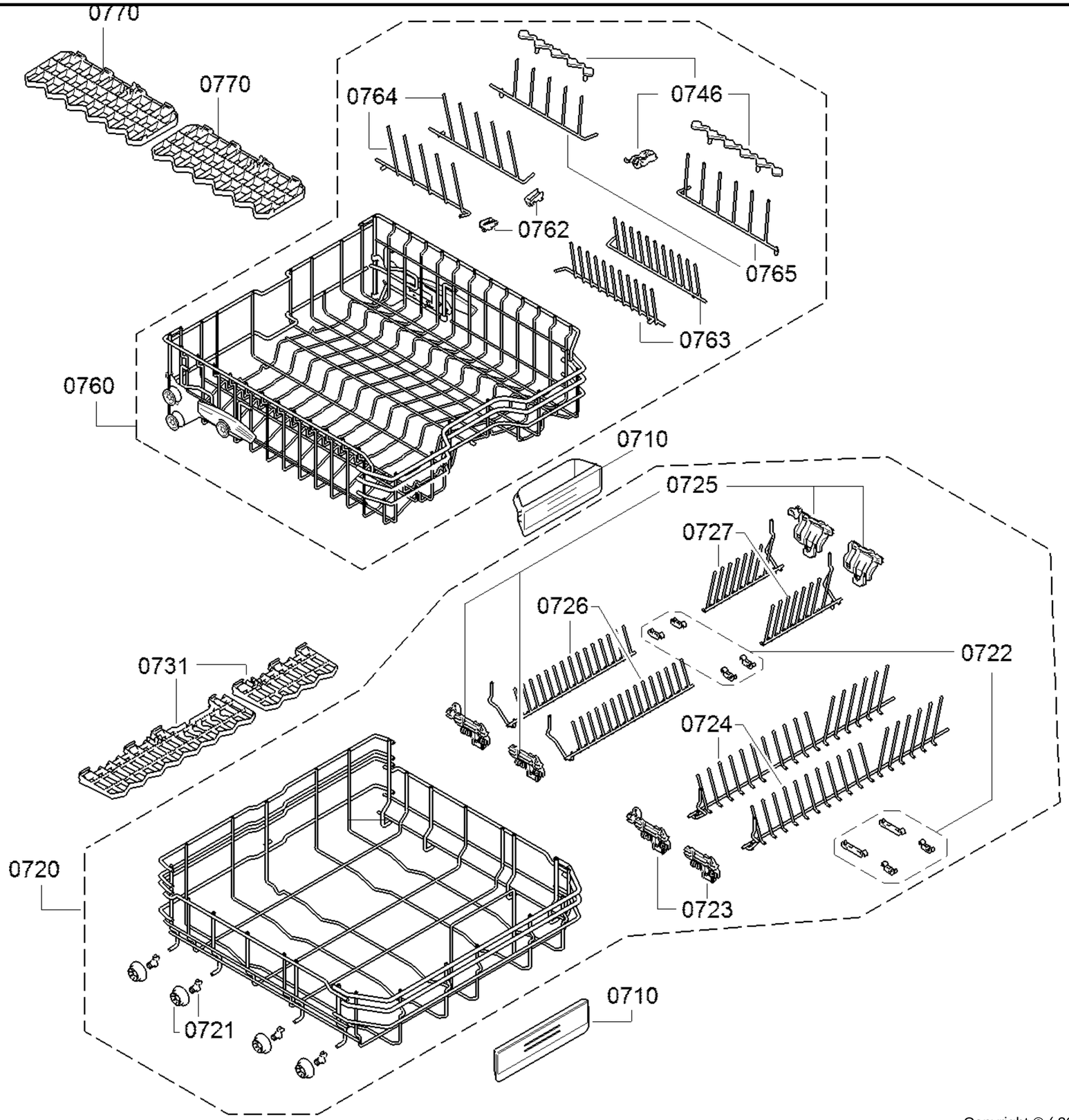

58300000188018 aet 007 b

Copyright © (2023) by Bosch / 205502

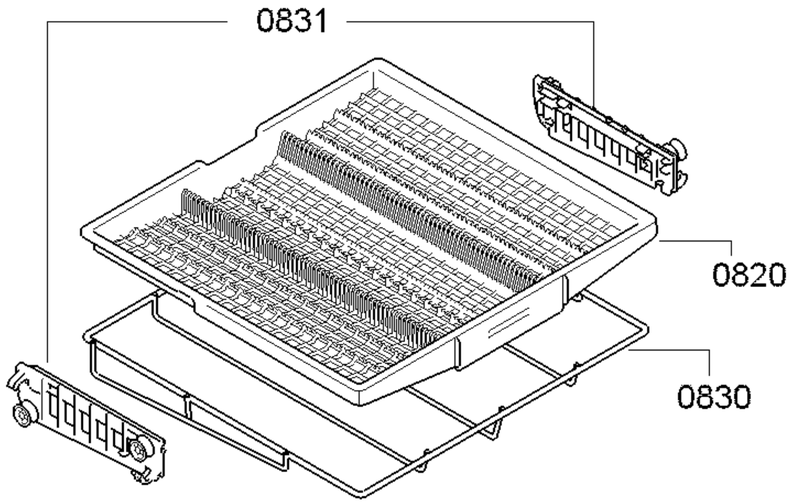

Copyright © (2023) by Bosch / 205502