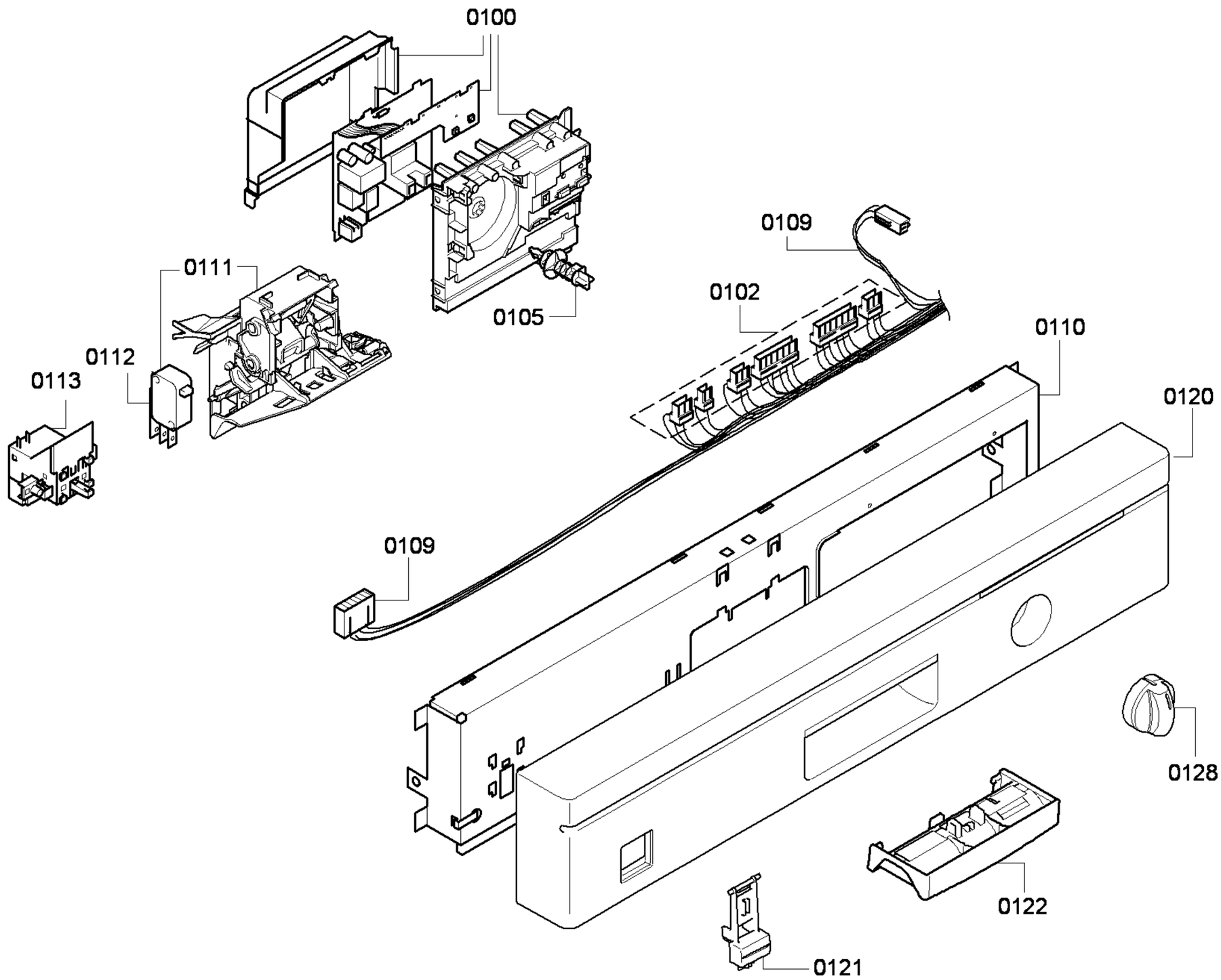

Copyright © (2015) by Constructa / 205502

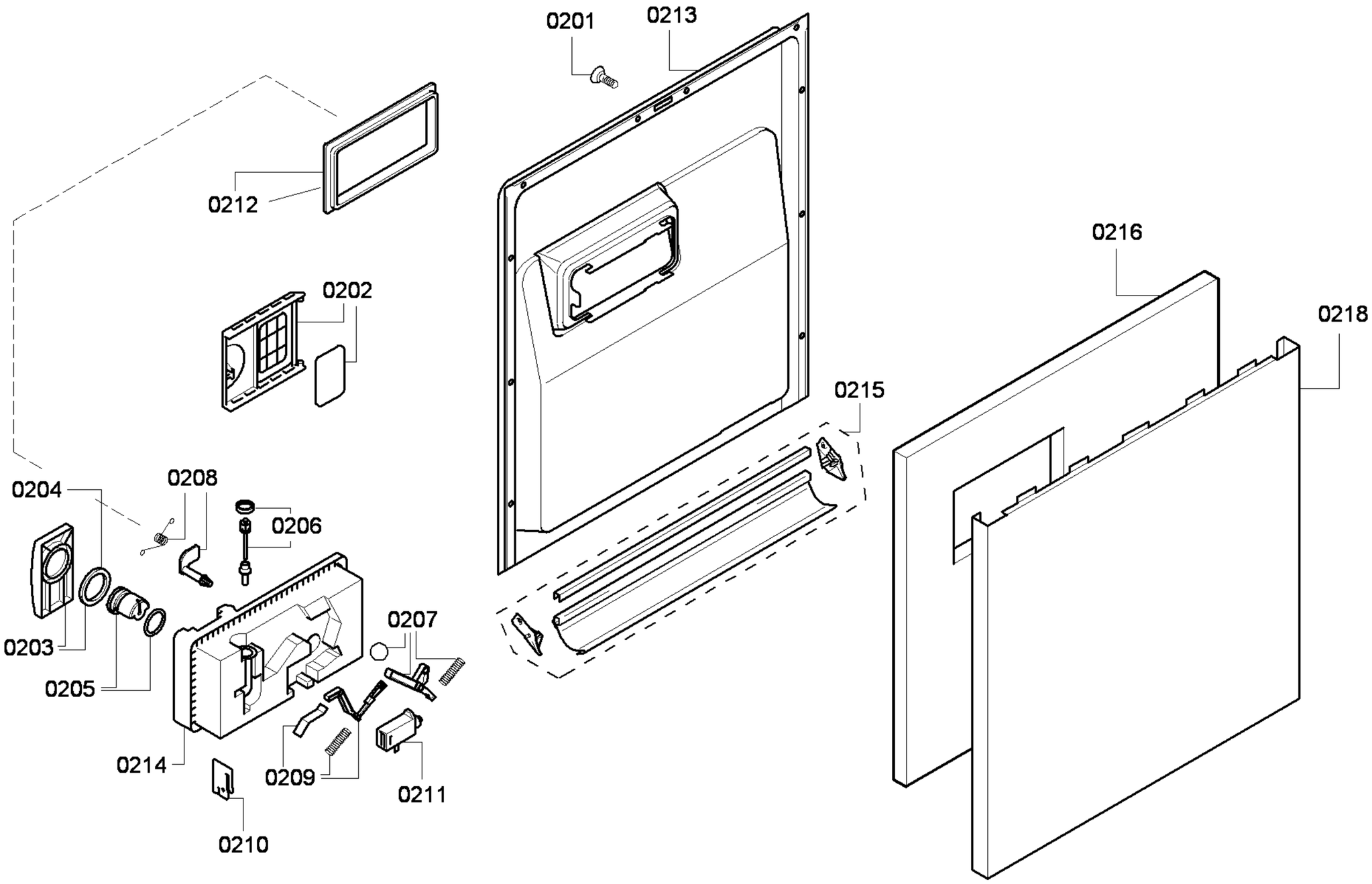

Copyright © (2015) by Constructa / 205502

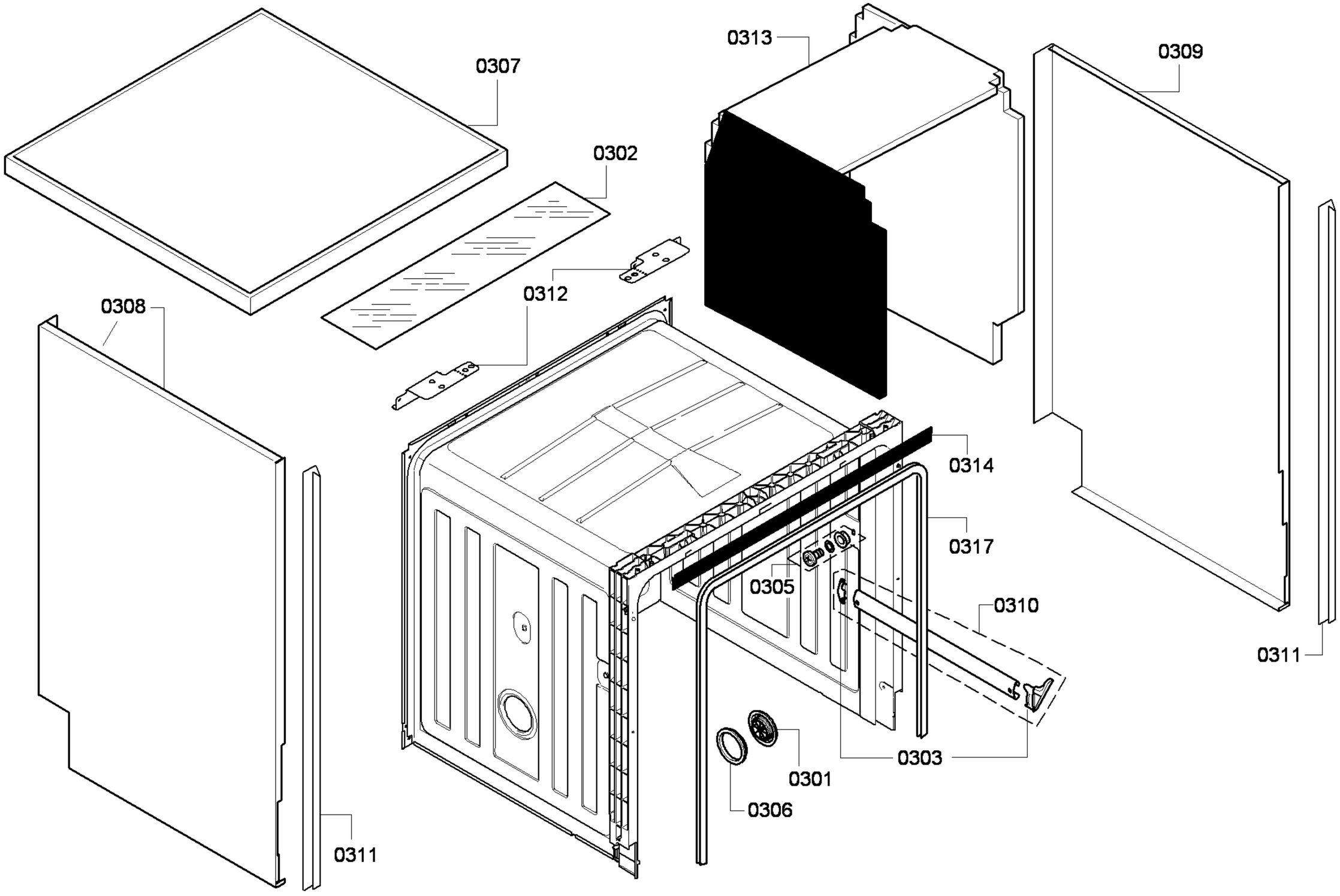

Copyright © (2015) by Constructa / 205502

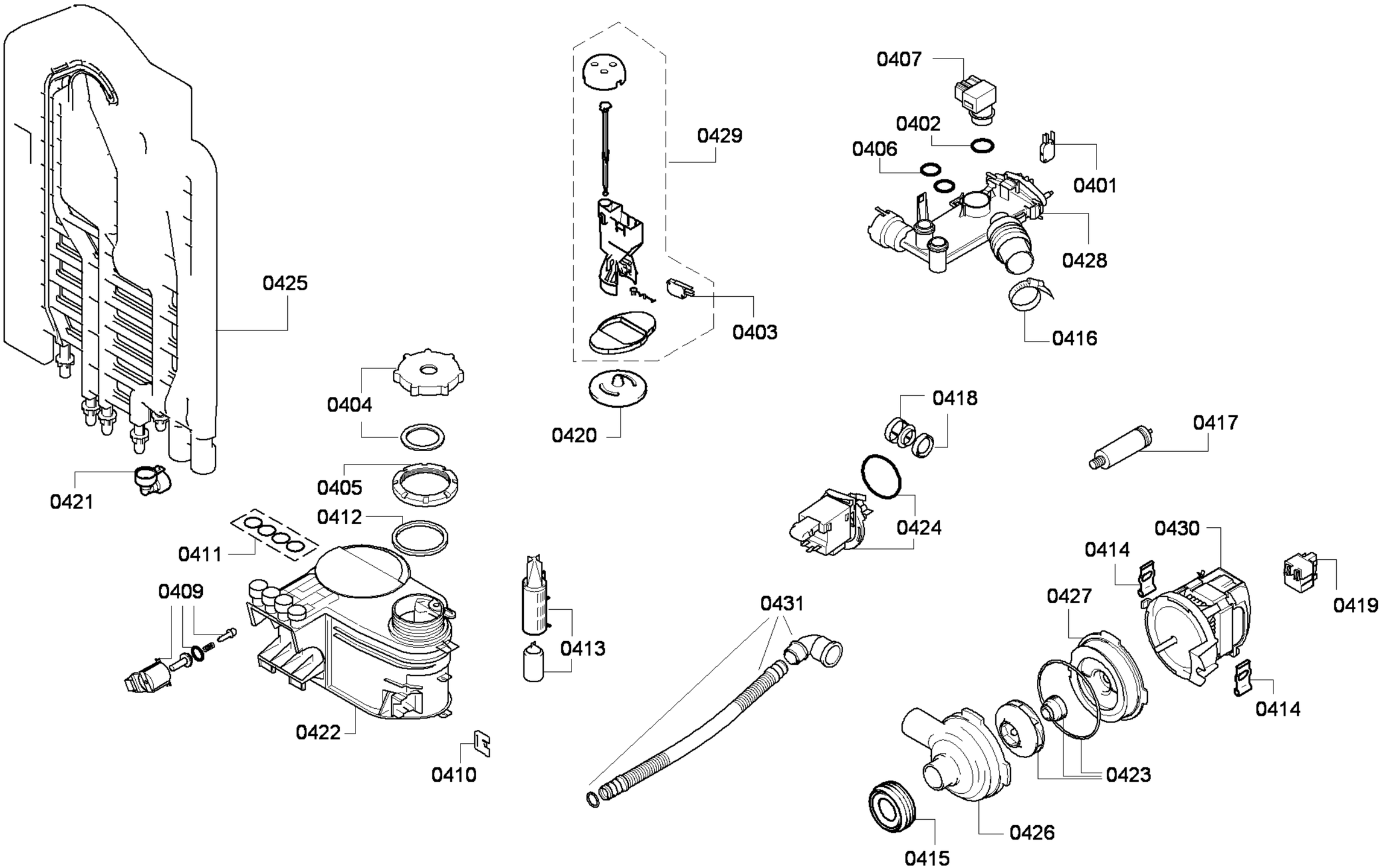

Copyright © (2015) by Constructa / 205502

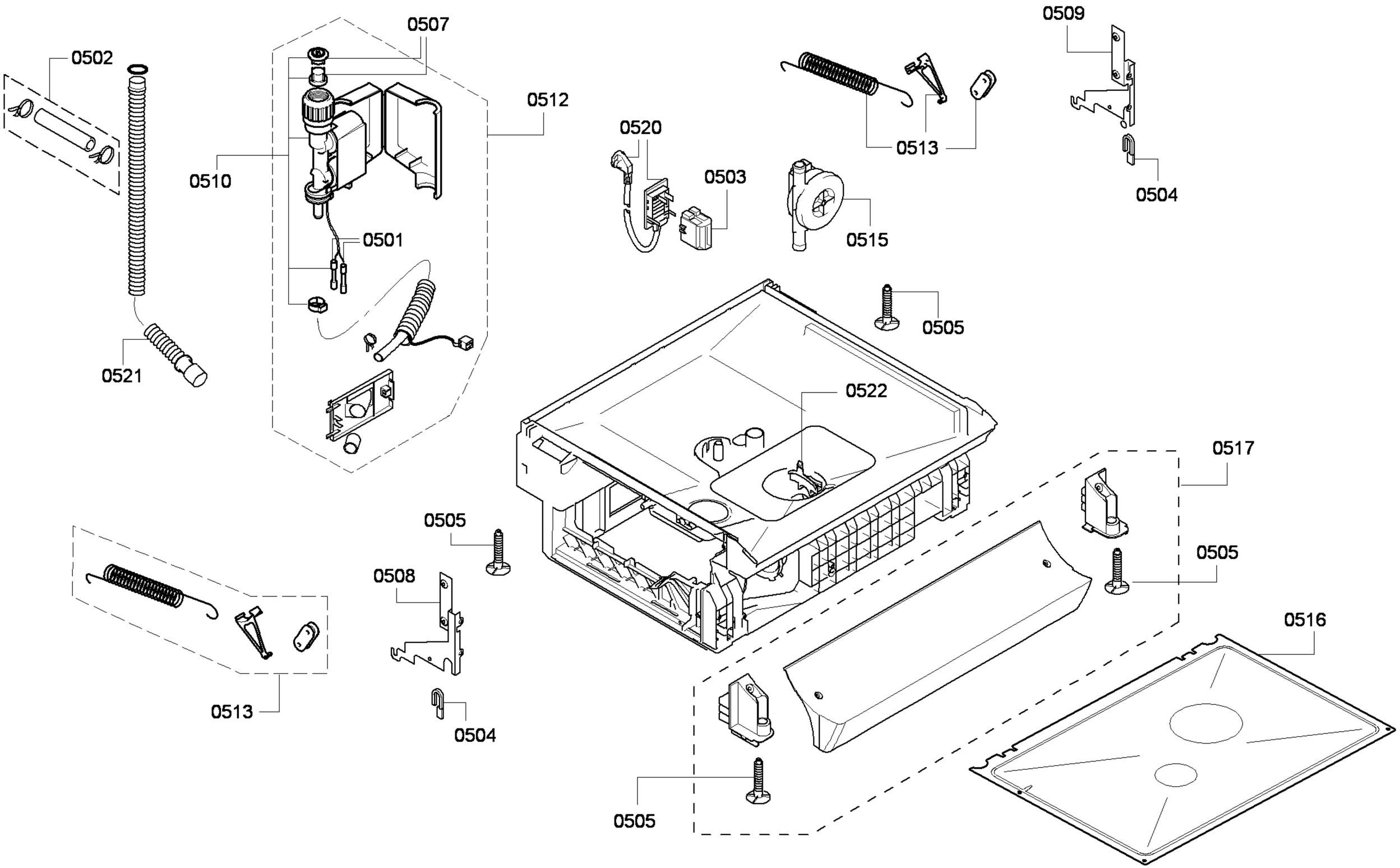

Copyright © (2015) by Constructa / 205502

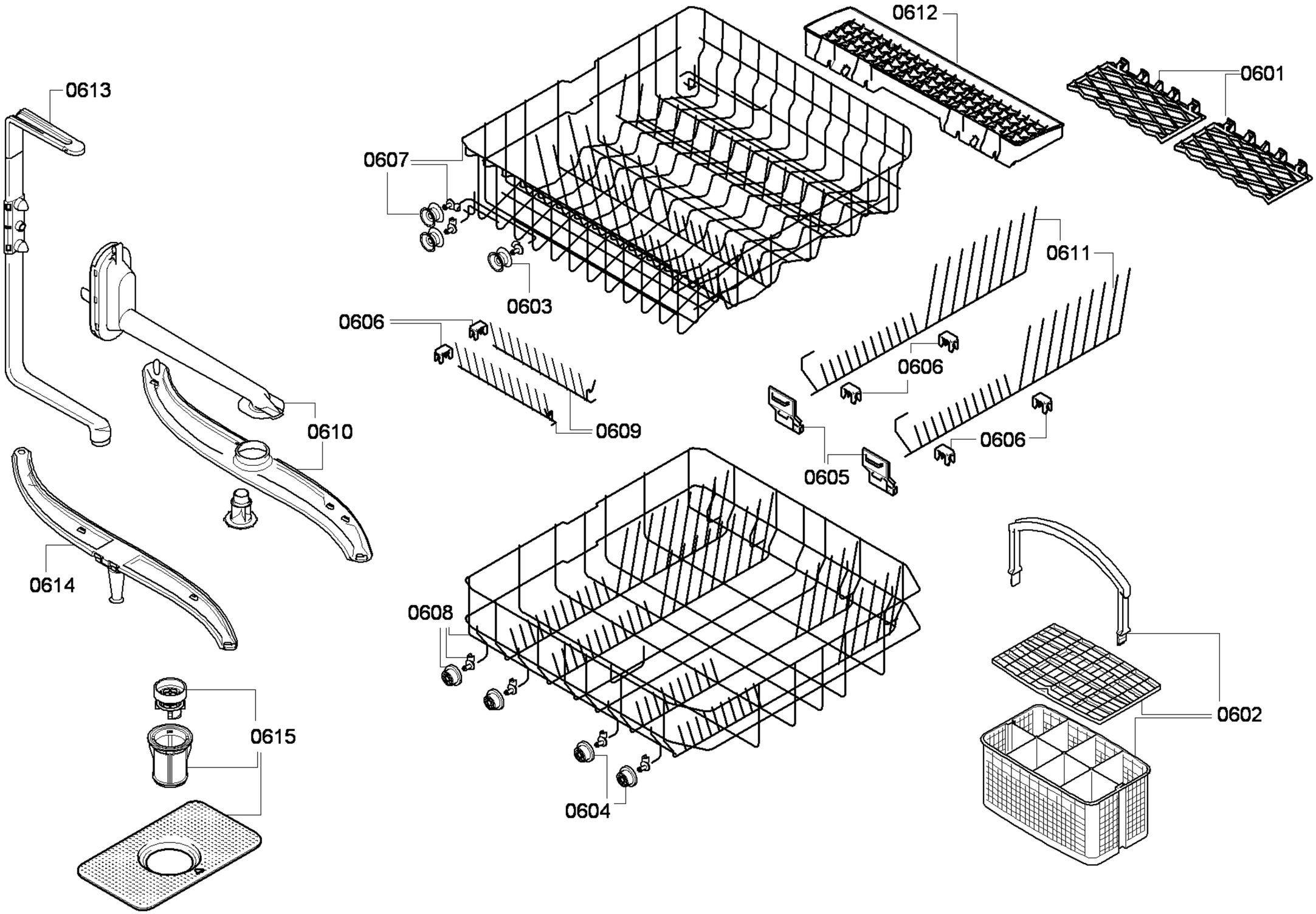

58300000142154 aet 000 a 6/6

Copyright © (2015) by Constructa / 205502