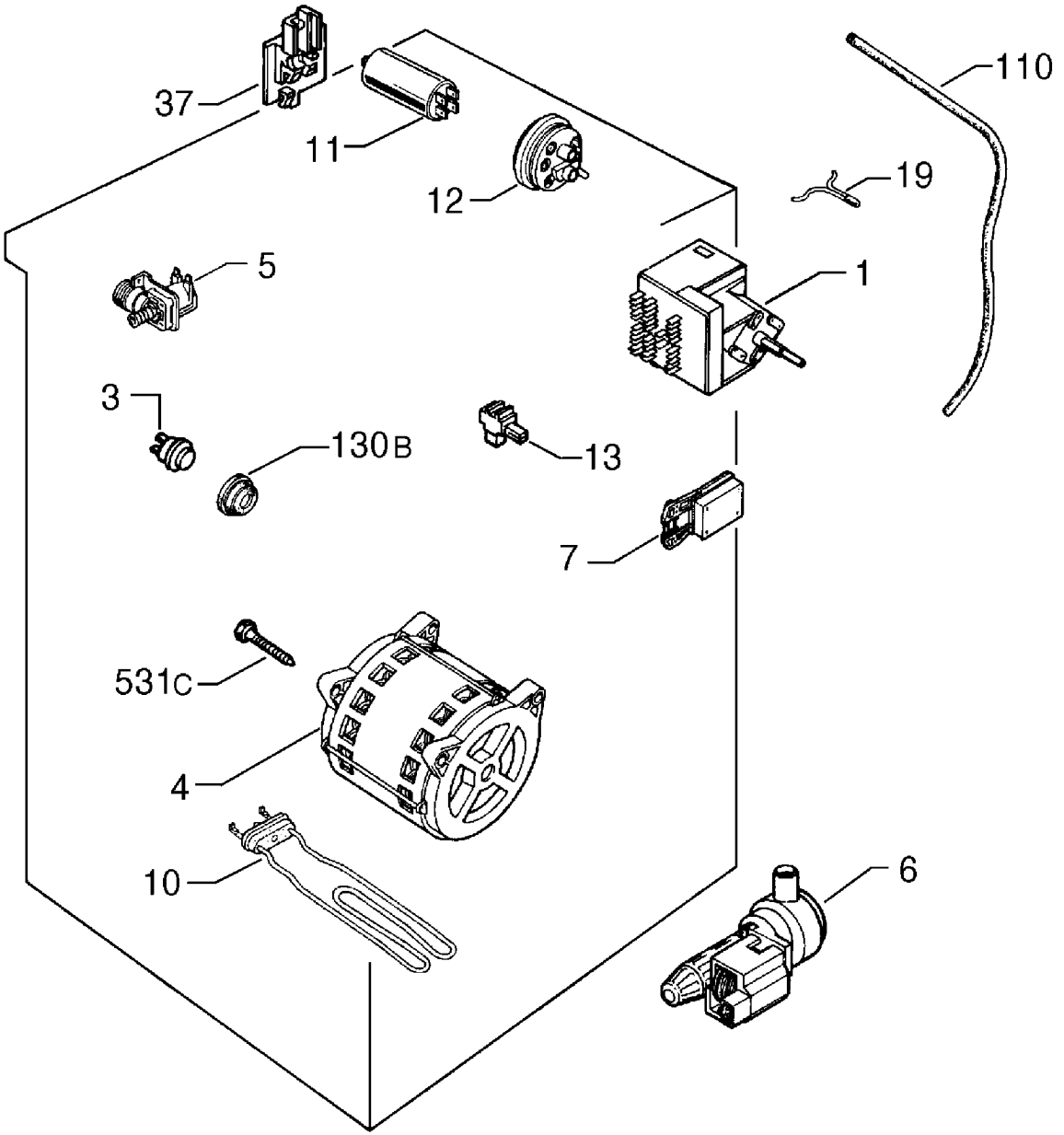

91406172