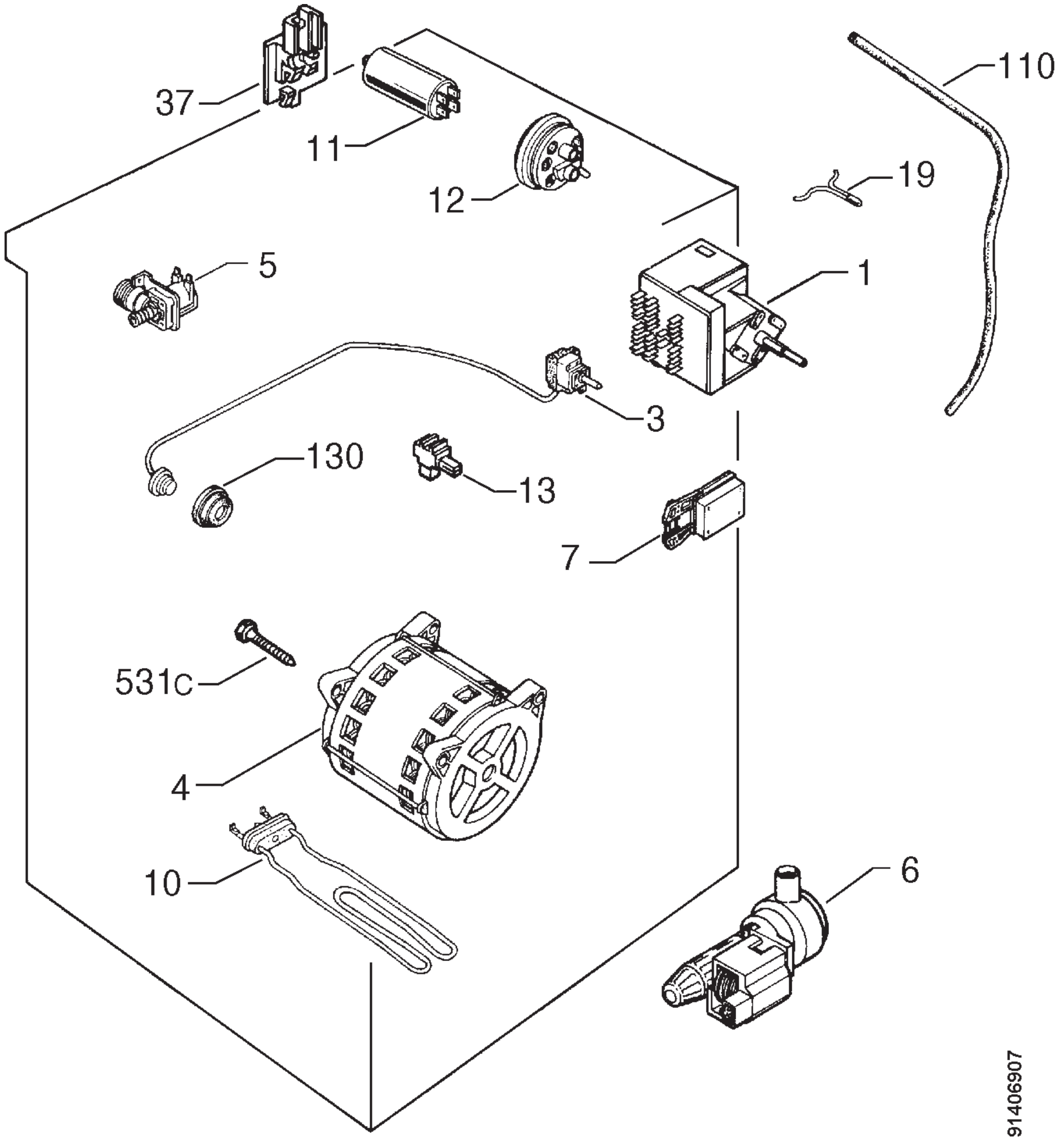
37
11
12
110
19
5
1
3
130
13
7
531c
4
10
6
91406907