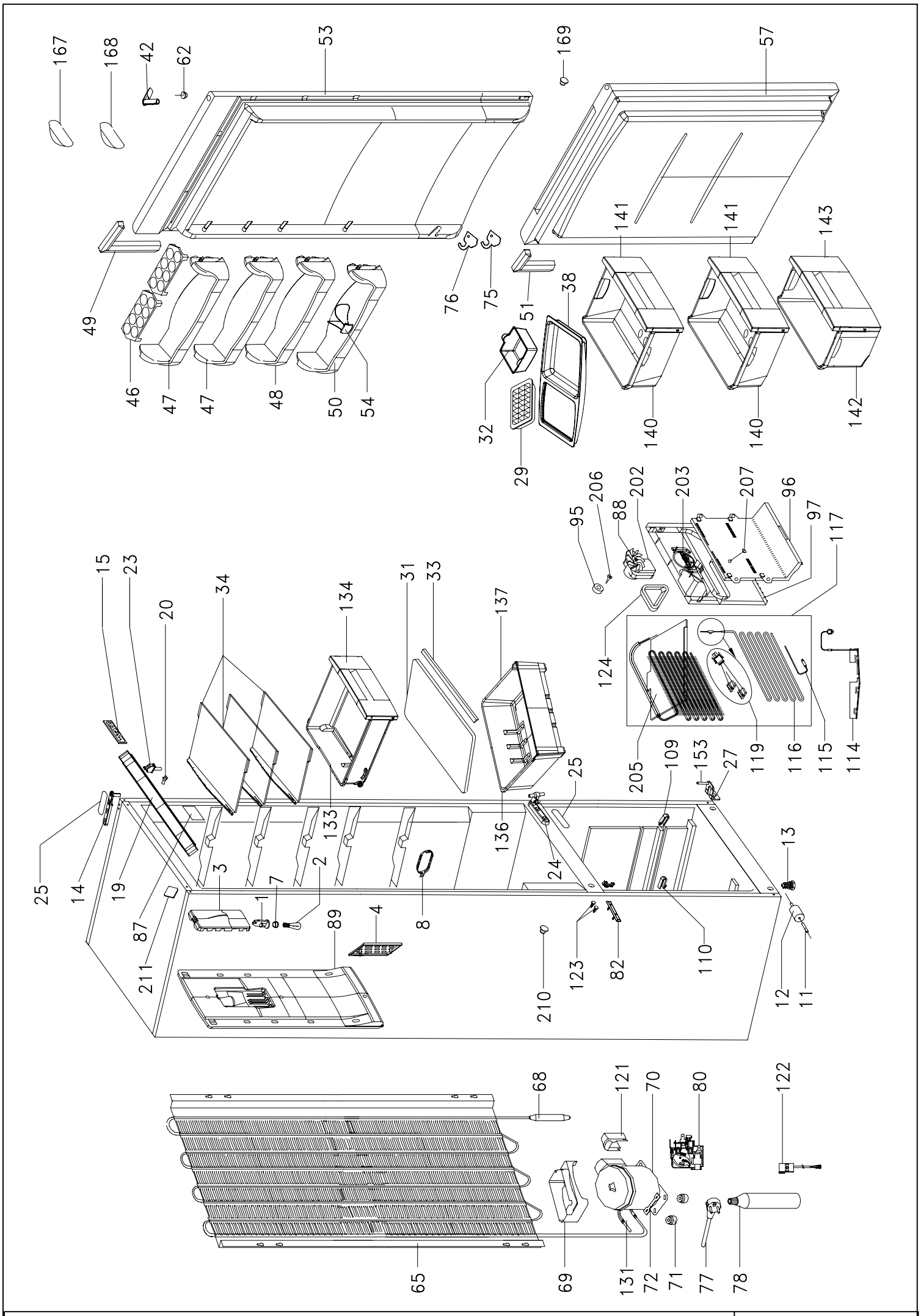

Owned by an entity of FAGOR GROUP / Copy prohibited

Nº 22508