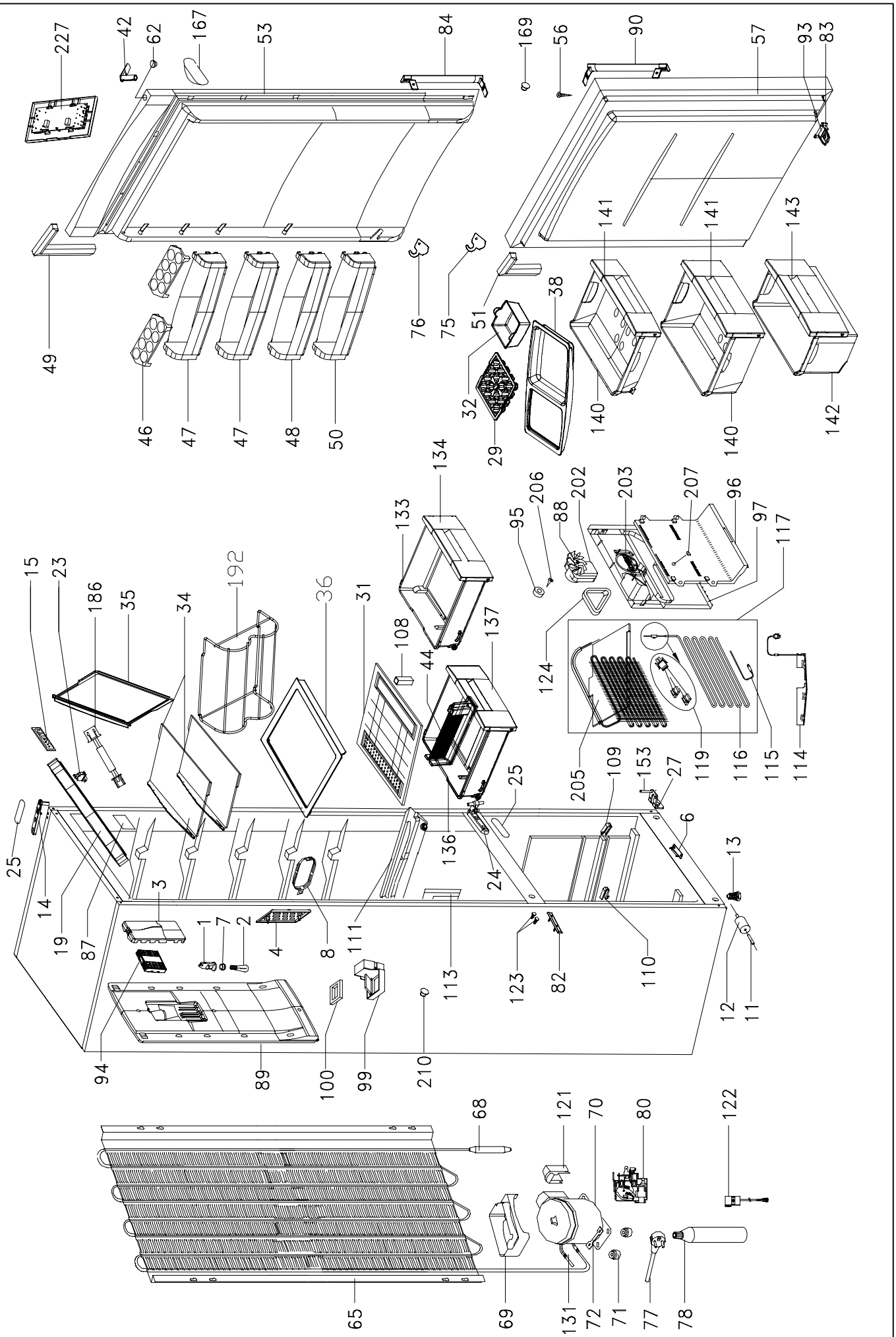

Owned by an entity of FAGOR GROUP / Copy prohibided

Nº 21737