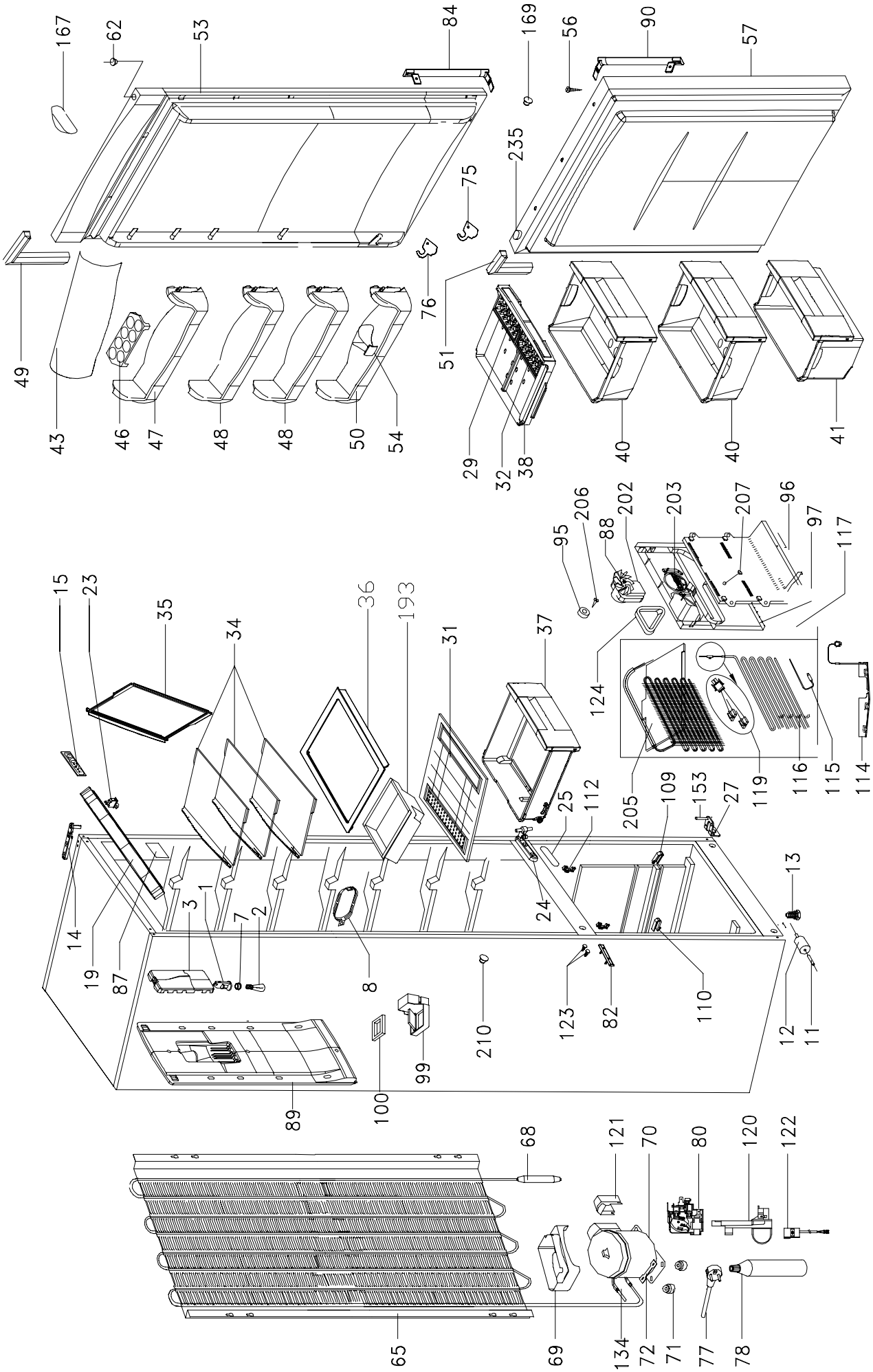

Owned by an entity of FAGOR GROUP / Copy prohibited

N° 19581