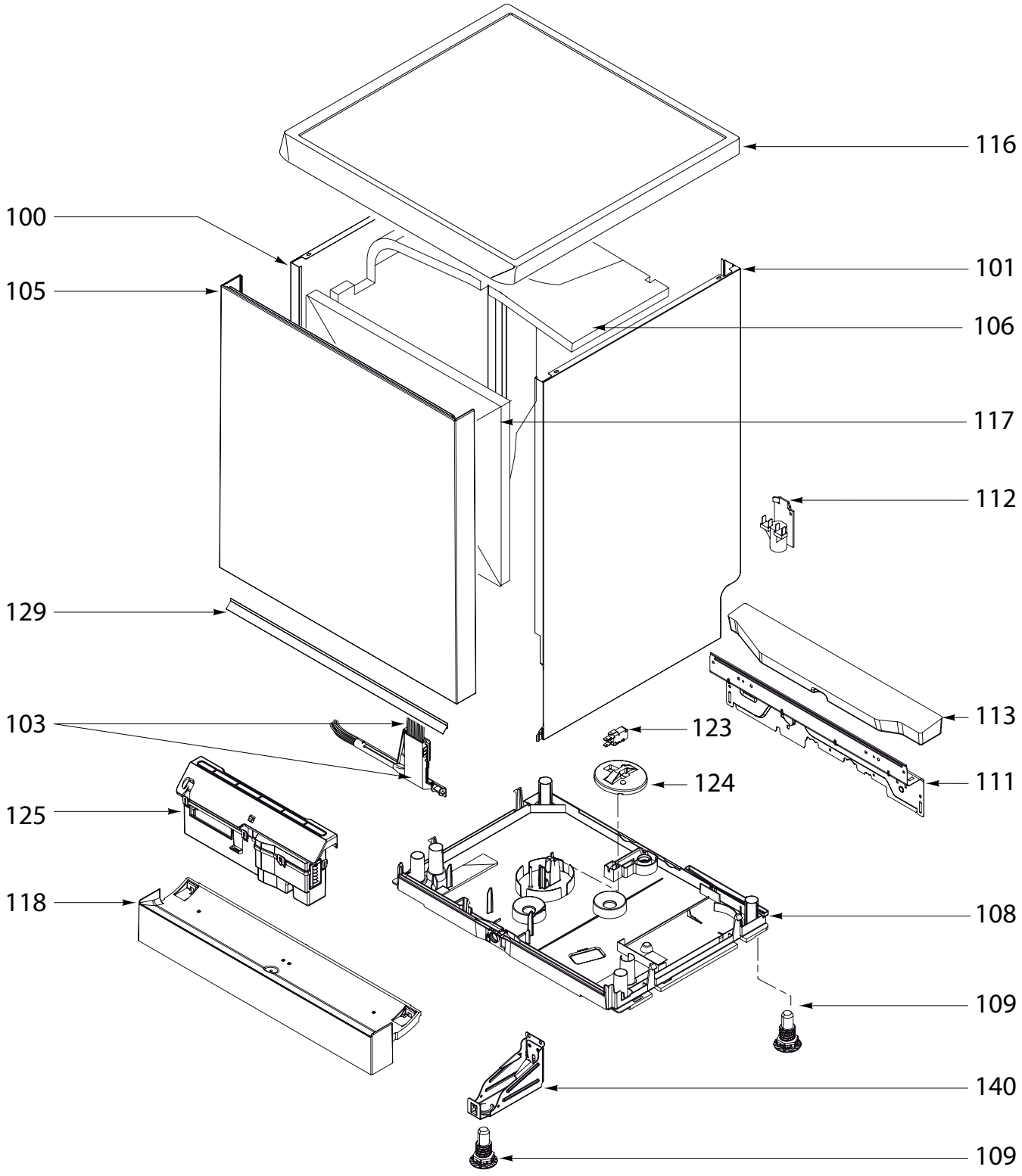

Owned by an entity of FAGOR GROUP / Copy prohibided

Nº 20625

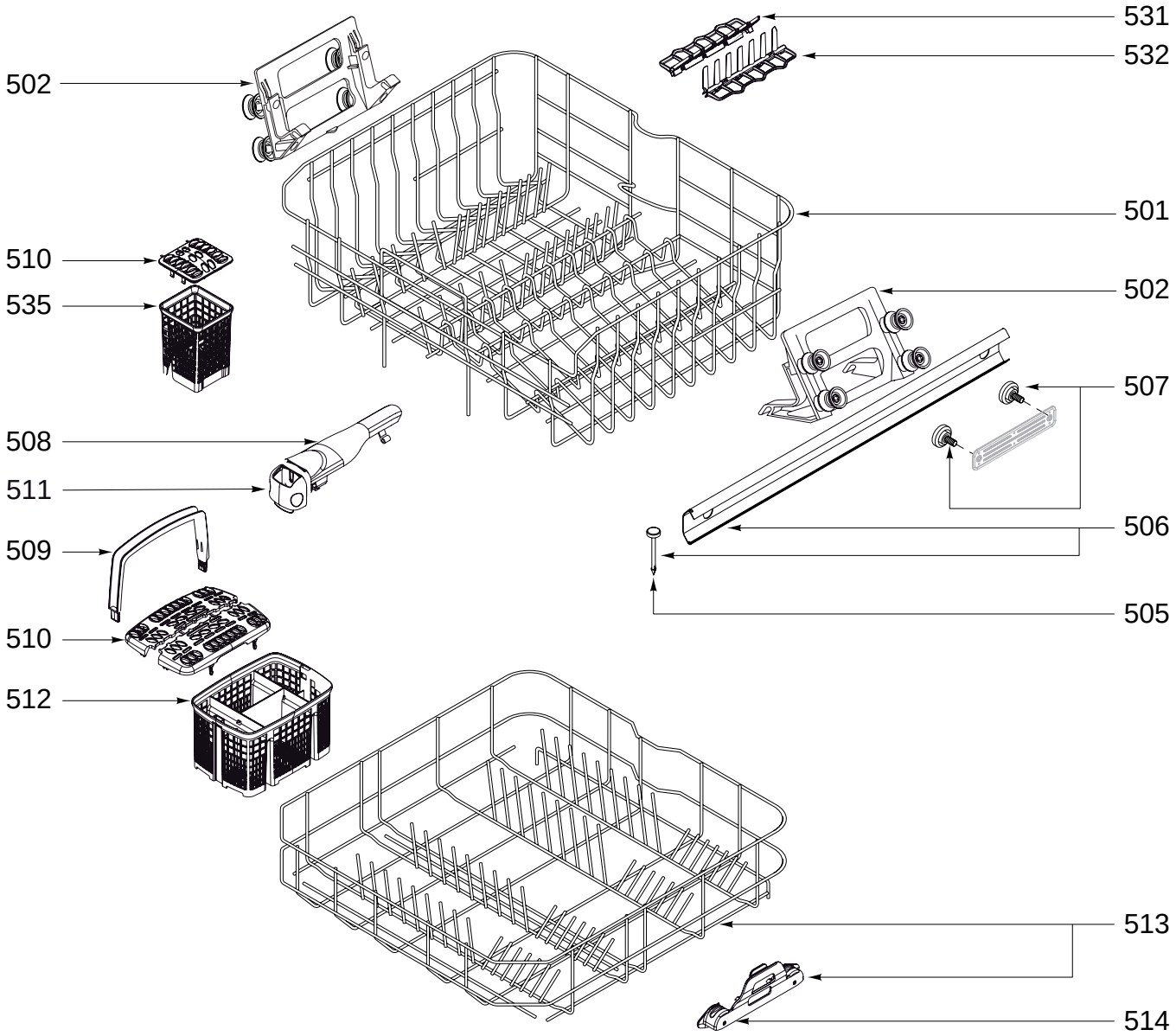

Owned by an entity of FAGOR GROUP / Copy prohibided

Nº 20729

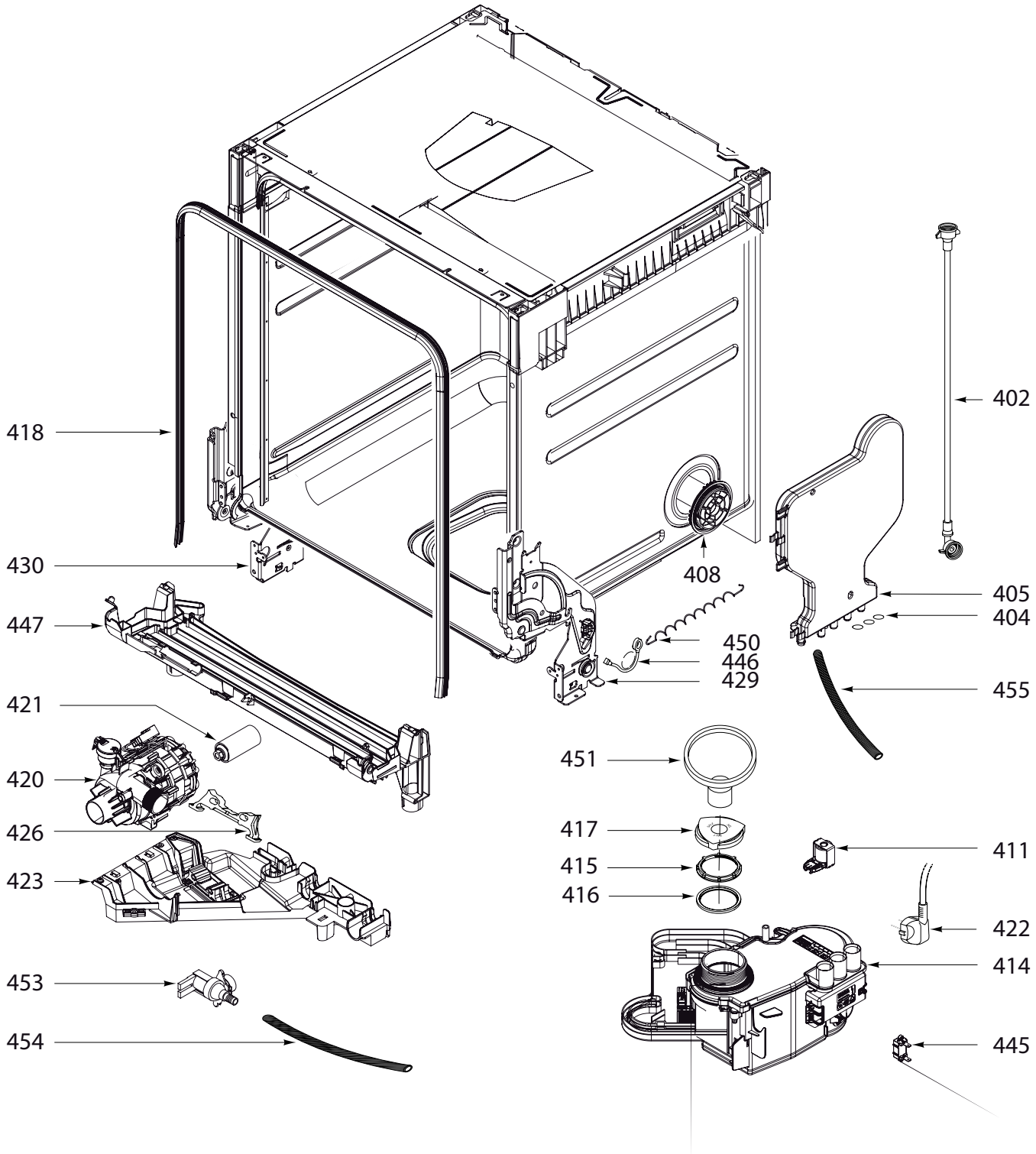

Owned by an entity of FAGOR GROUP / Copy prohibided

Nº 20730

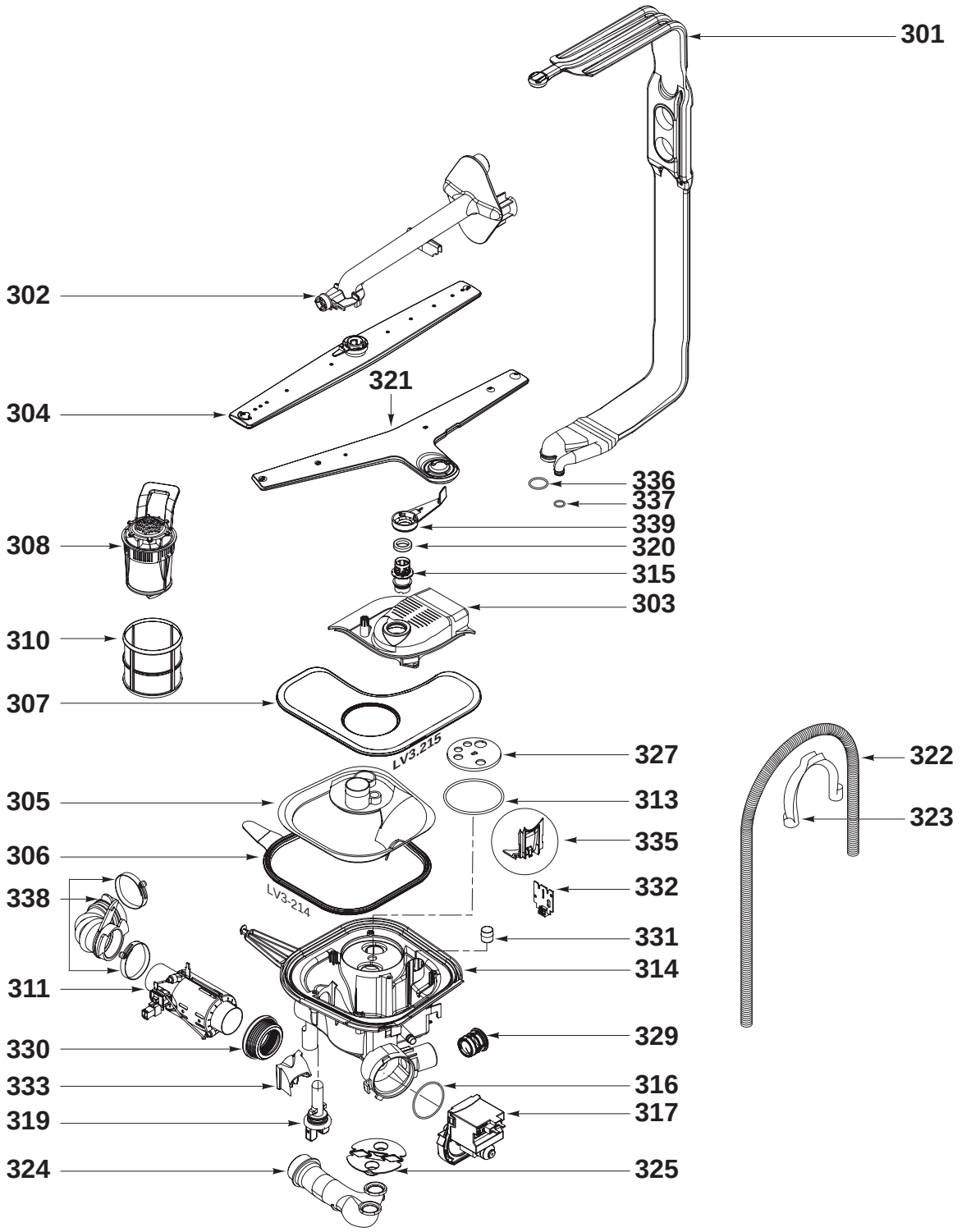
301
302
304
321
336
337
339
320
315
303
308
310
307
LV3.215
327
322
305
313
323
306
335
338
LV3-214
332
331
314
311
329
330
333
316
319
317
324
325

LV3.215

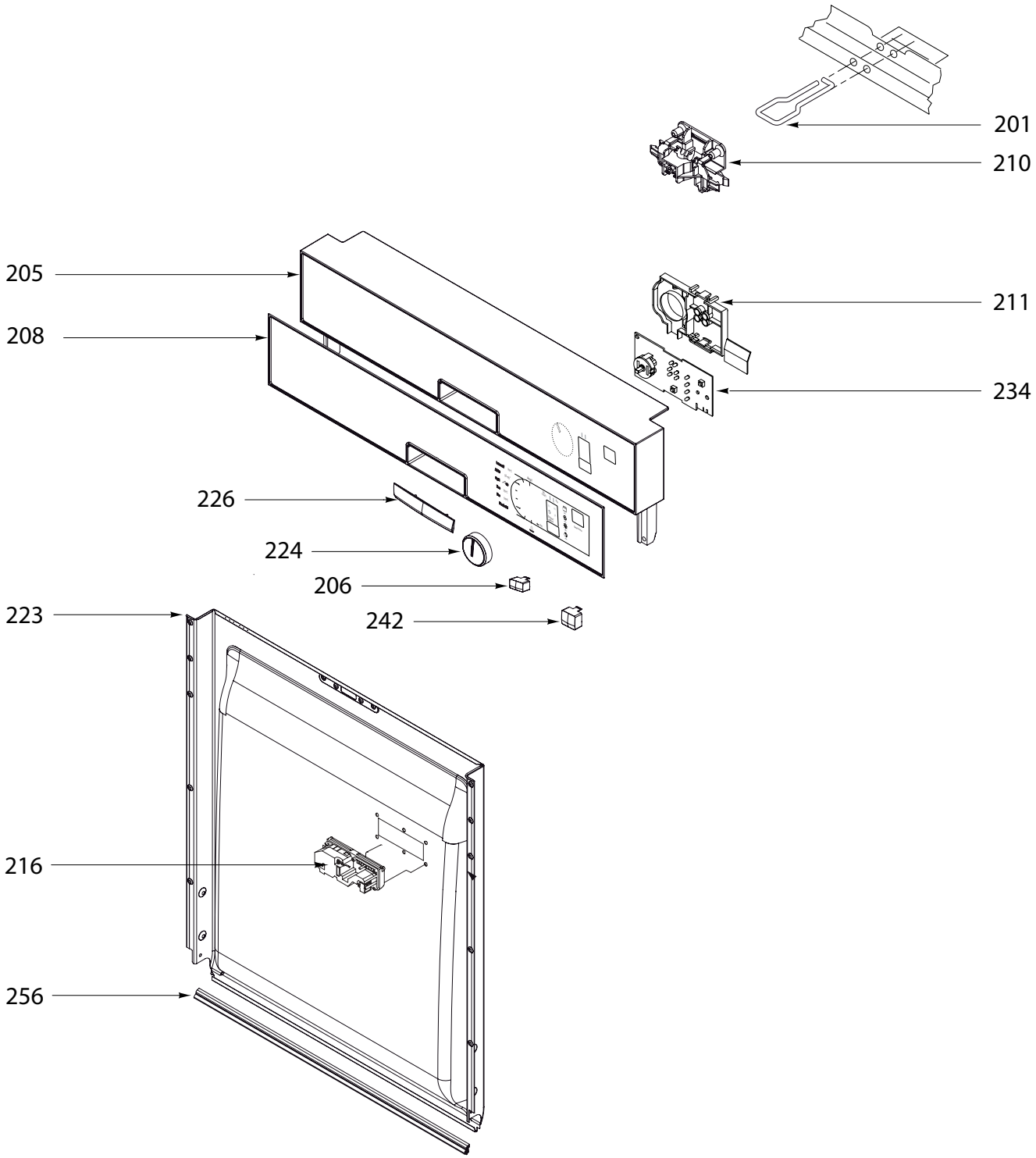

Owned by an entity of FAGOR GROUP / Copy prohibided