VESTEL WHITE GOODS	VESTEL NO FROST-COMBI	CUSTOMER SUPPORT
	INTERIOR PARTS	

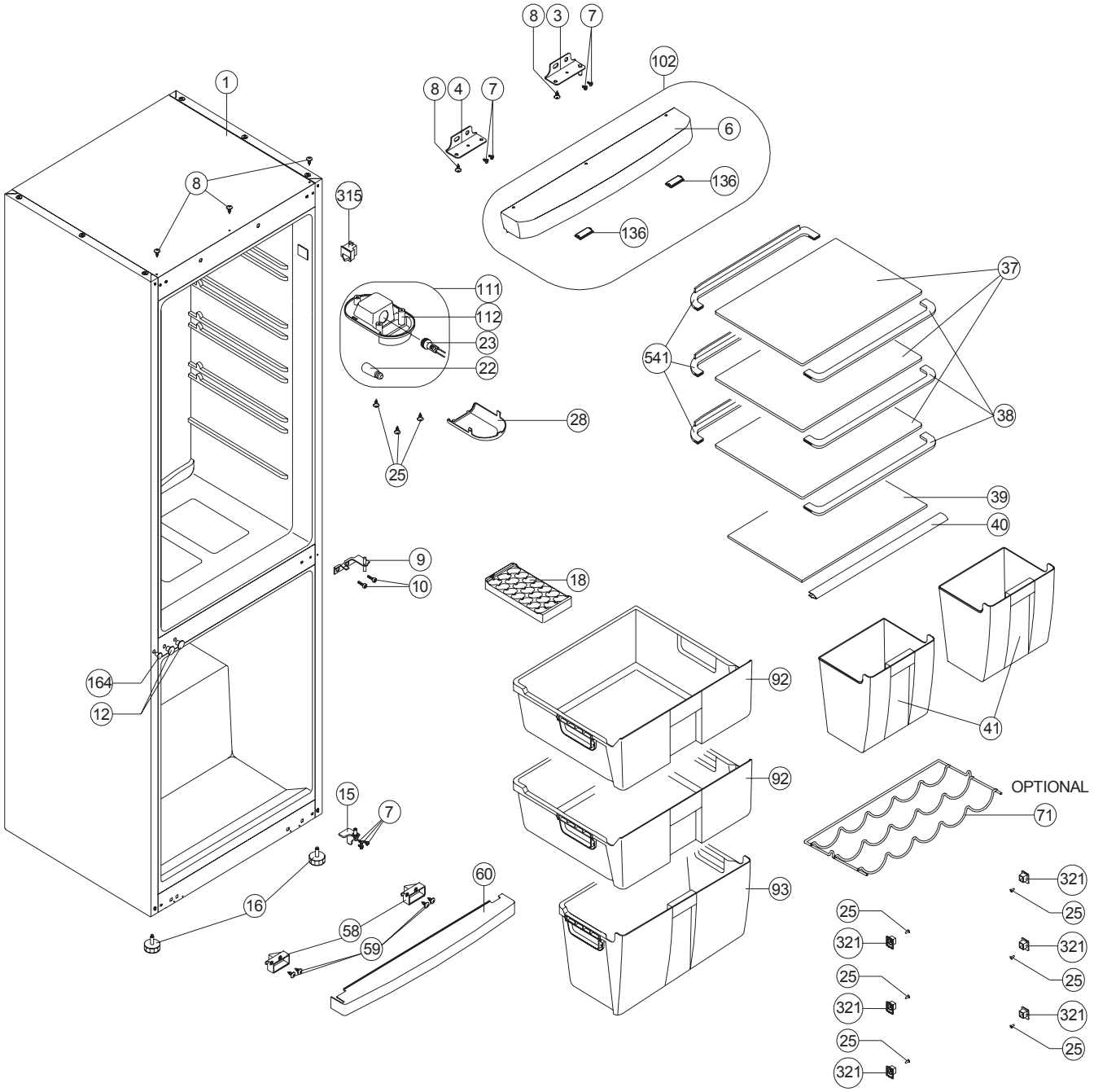

VESTEL WHITE GOODS	**VESTEL NO FROST-COMBI**	**CUSTOMER SUPPORT**
	MULTIFLOW PARTS	

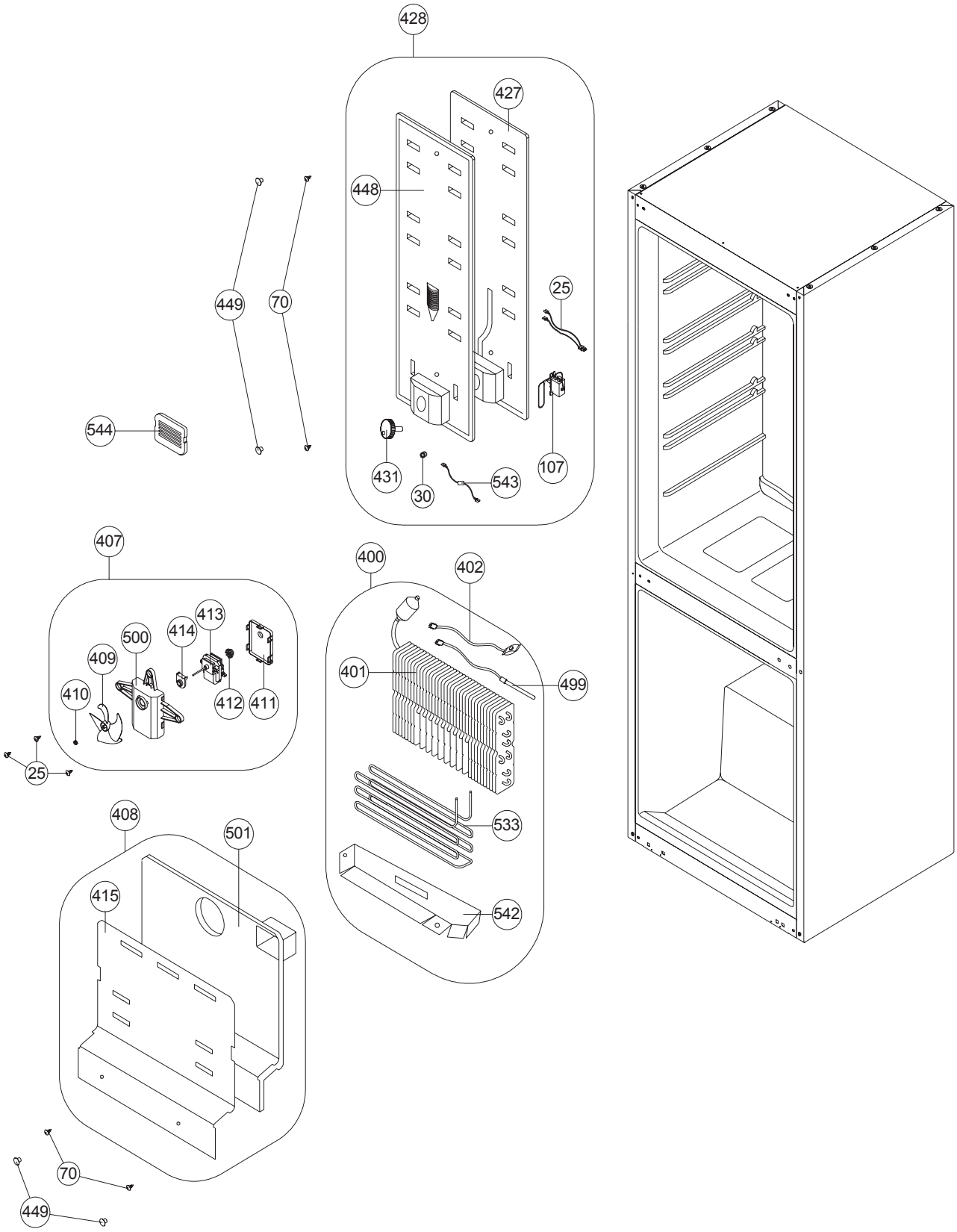

VESTEL WHITE GOODS	VESTEL NO FROST-COMBI	CUSTOMER SUPPORT
	DOOR ASSY. PARTS-1	

STANDARD DESIGN

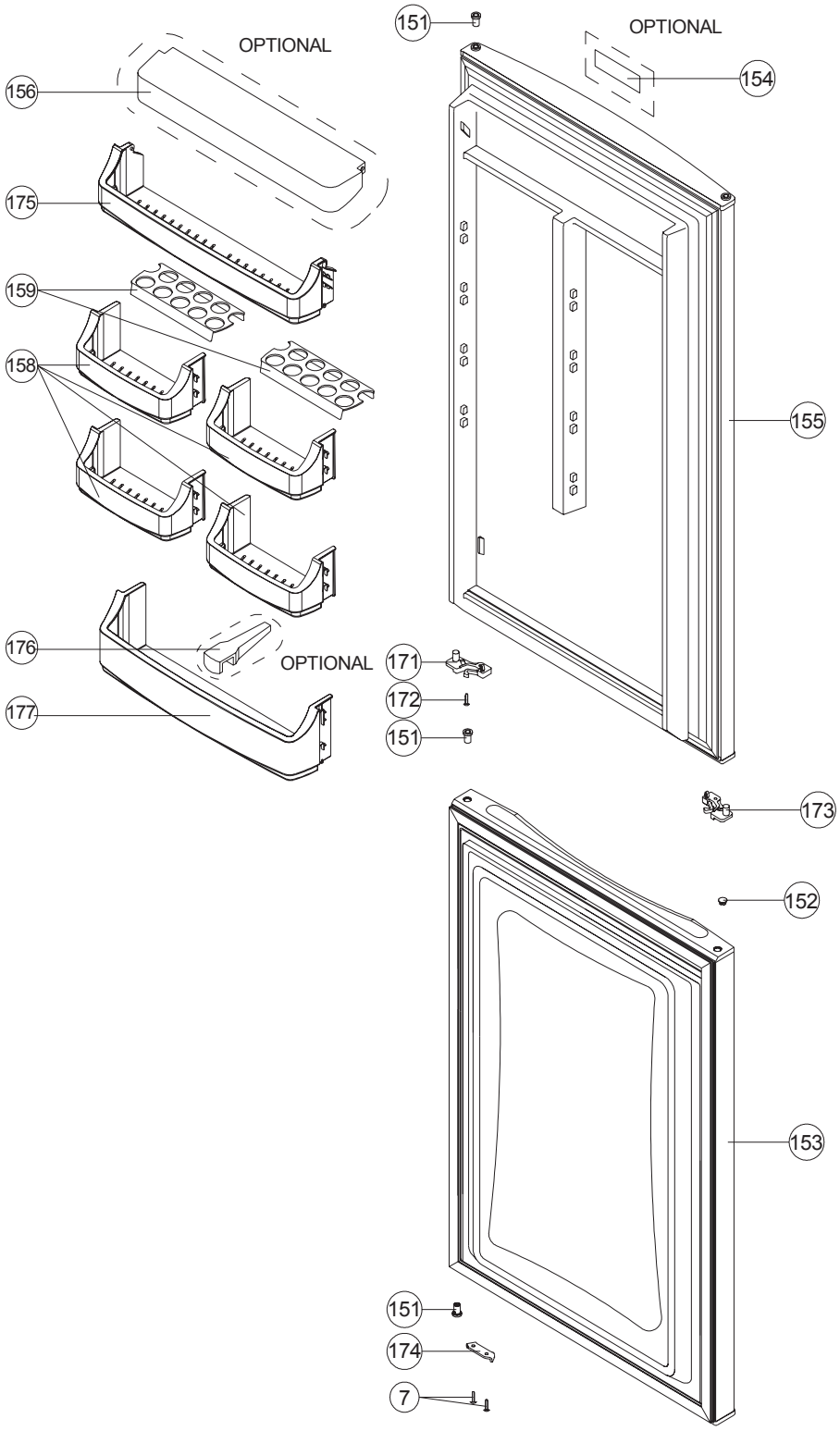

FULL WIDTH DESIGN

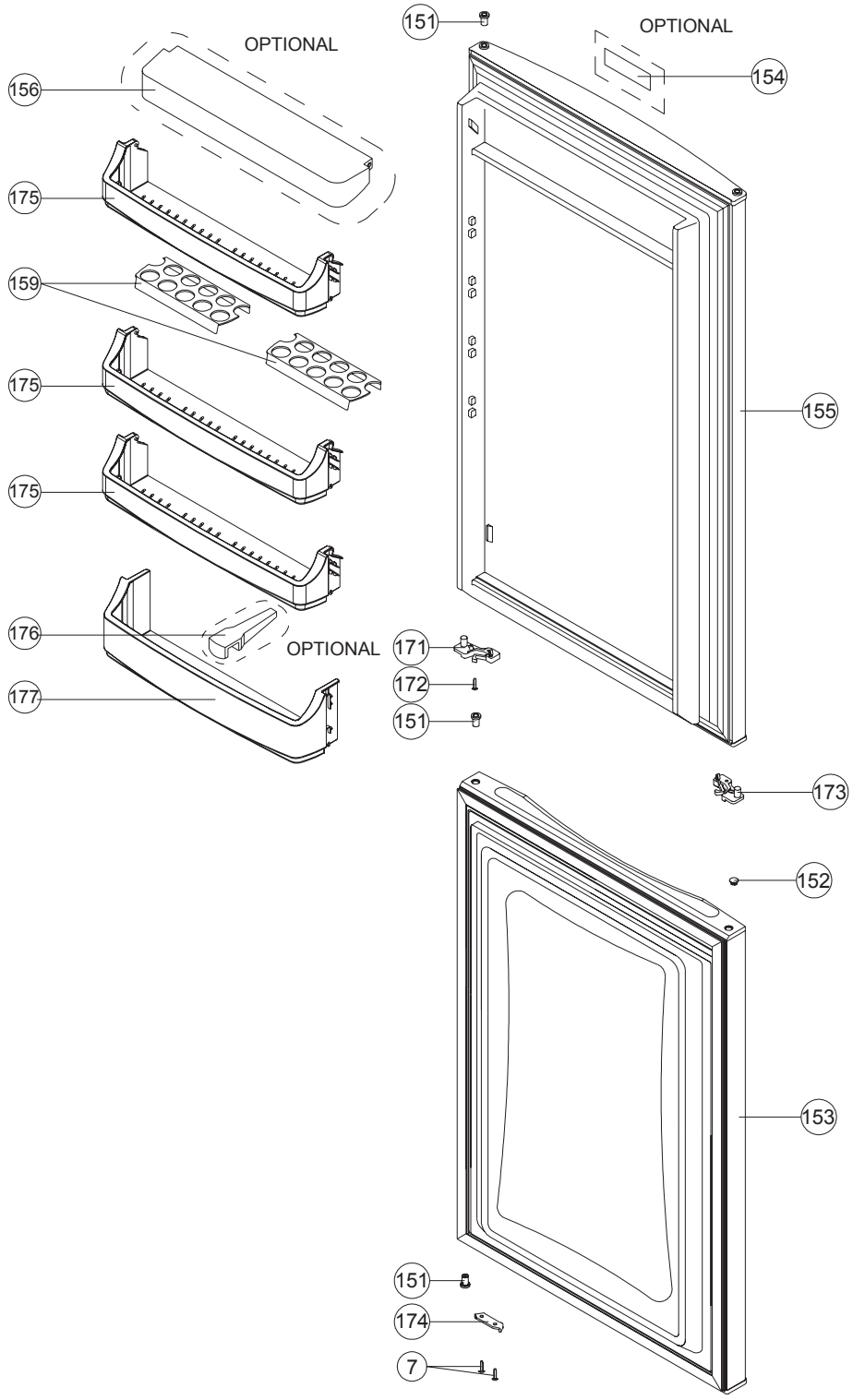
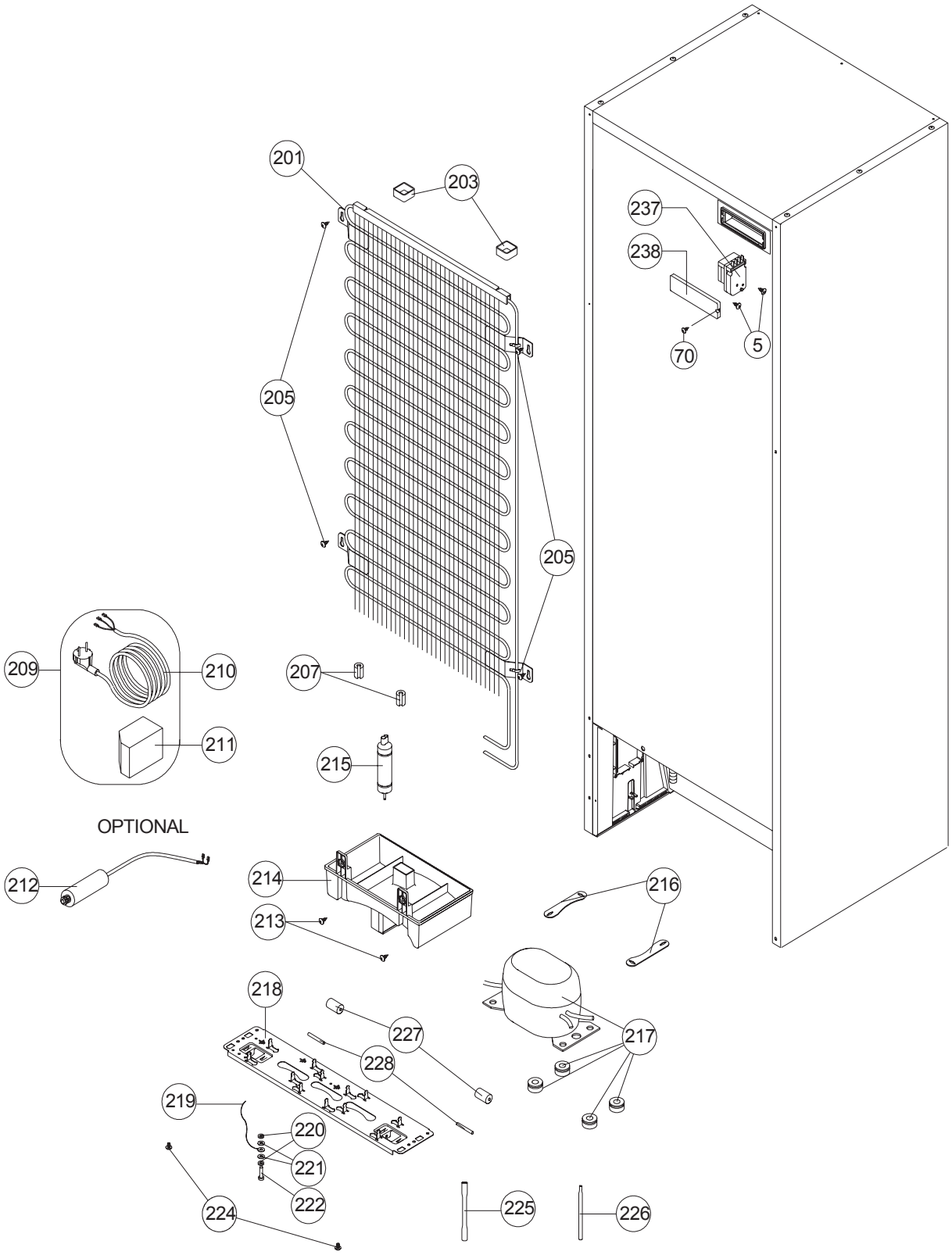
VESTEL WHITE GOODS	**VESTEL NO FROST-COMBI**	**CUSTOMER SUPPORT**
	UNIT PARTS