Haier

Diwshwasher Model:DW12-TFE3S BOM:FA07VBE0000

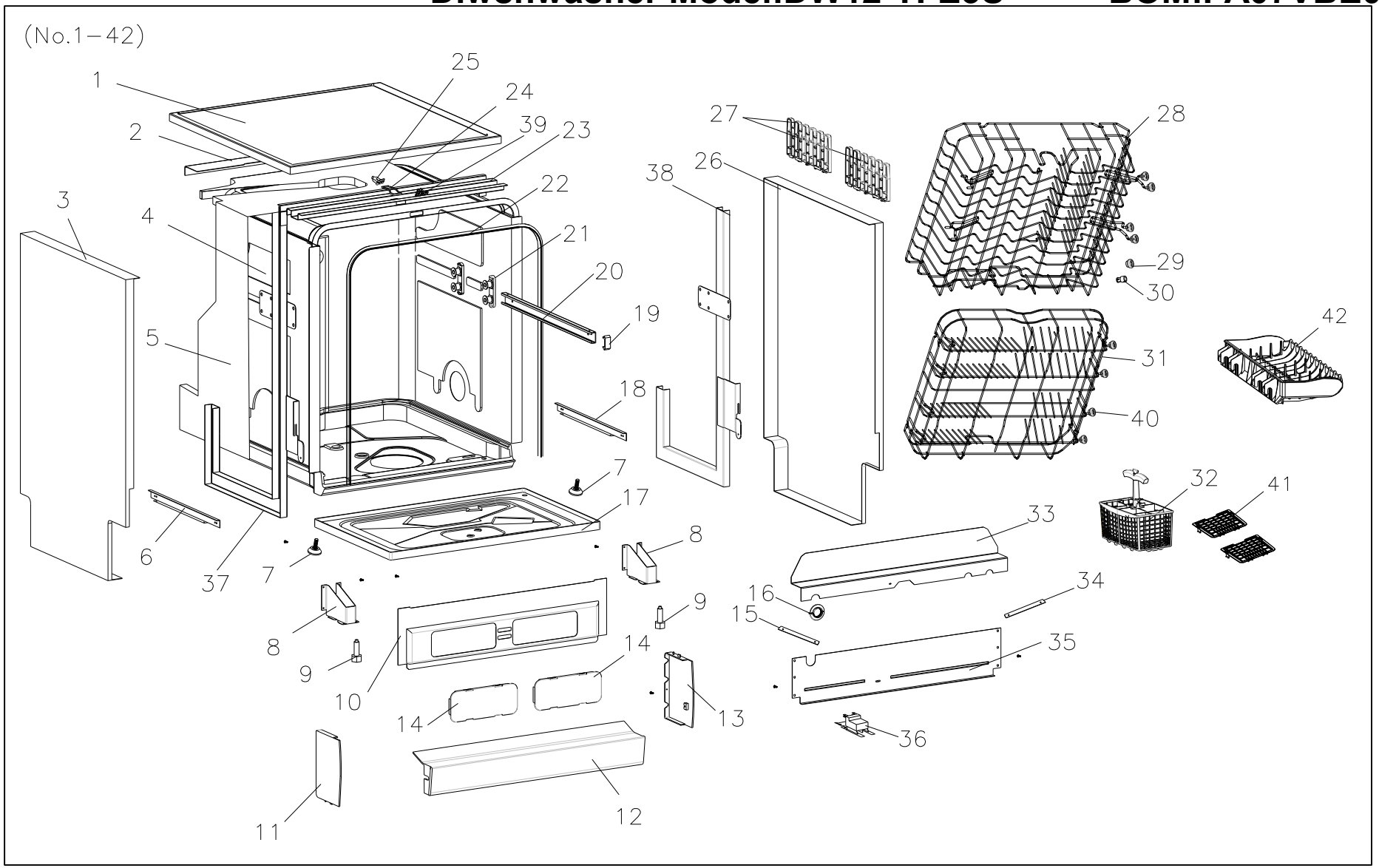

Exploded View

Version:2010-3-30

Haier

Diwshwasher Model:DW12-TFE3S BOM:FA07VBE0000

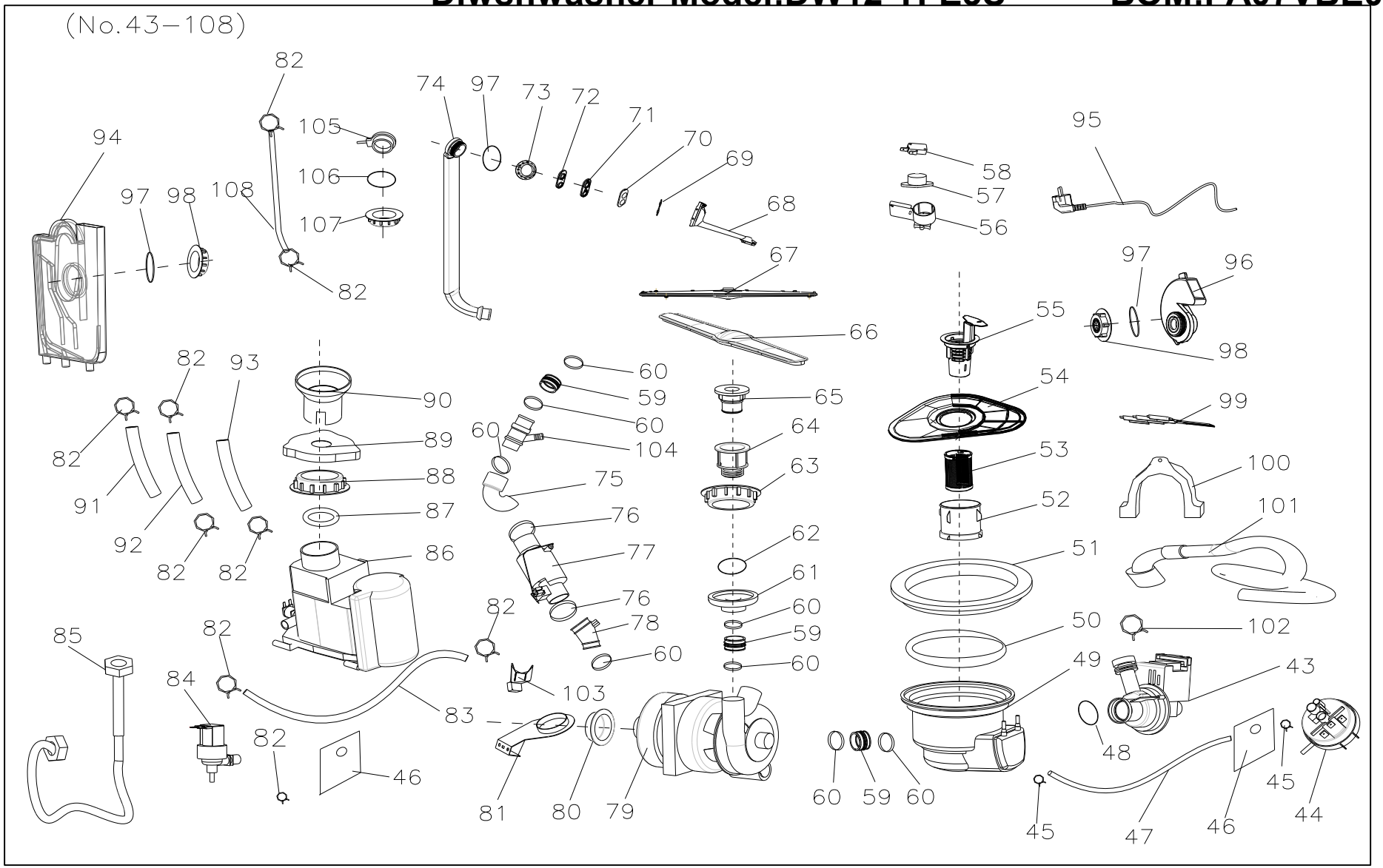

Exploded View

Version:2010-3-30

Haier

Diwshwasher Model:DW12-TFE3S BOM:FA07VBE0000

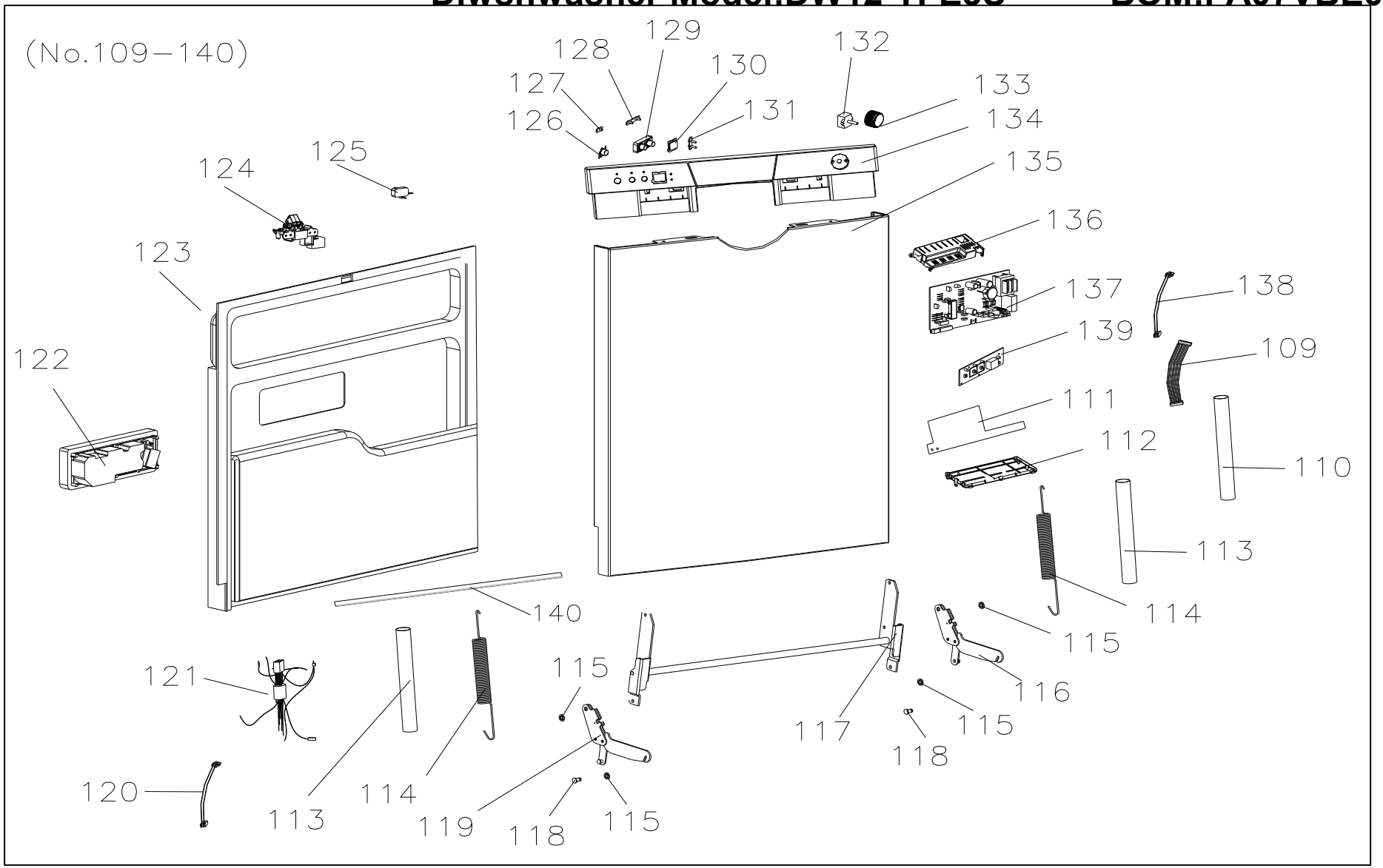

Exploded View

Version:2010-3-30