Haier

Diwshwasher Model:DW9-TFE3 BOM:FA07U8E0000

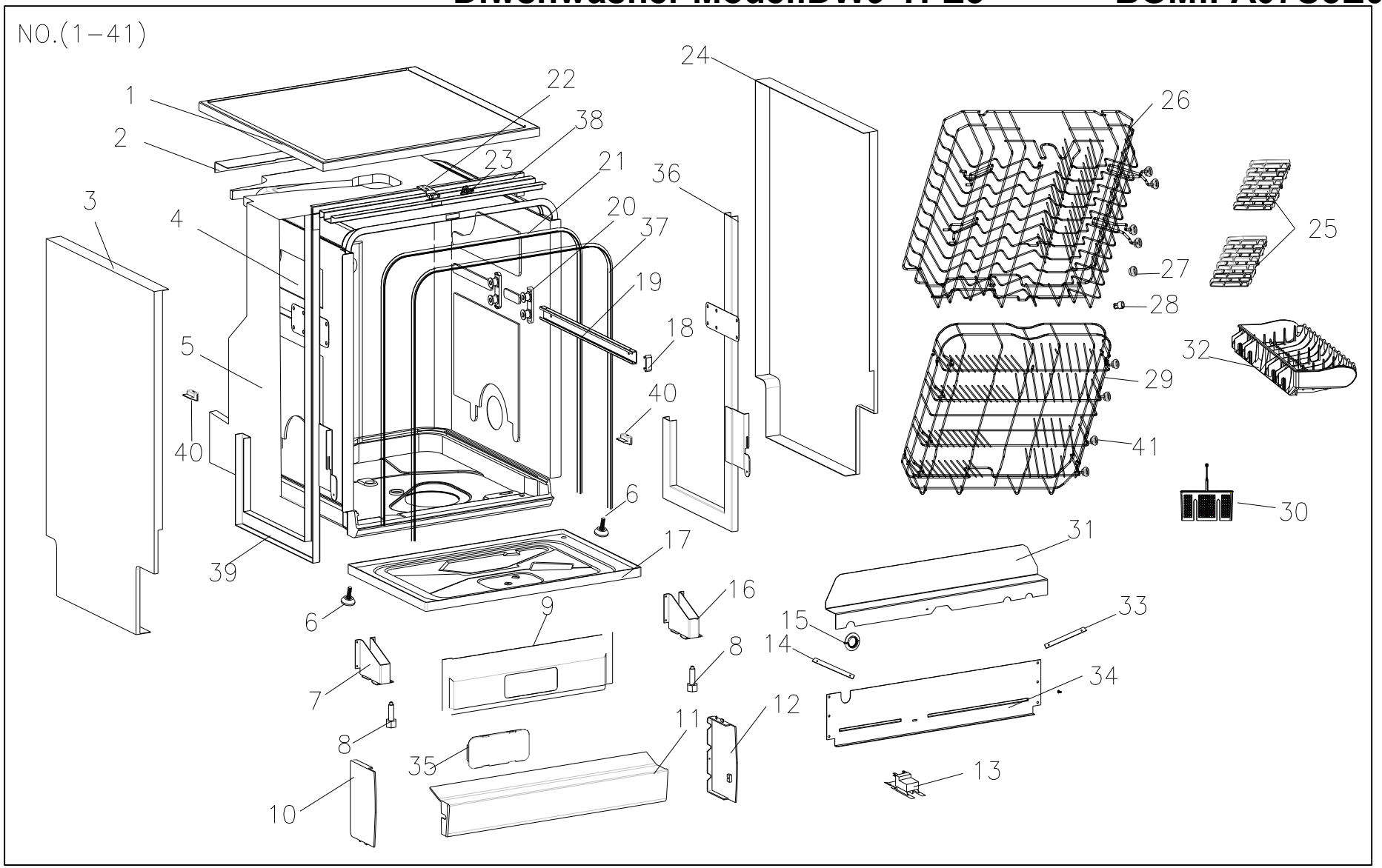

Exploded View

Version:2010-5-5

Haier

Diwshwasher Model:DW9-TFE3 BOM:FA07U8E0000

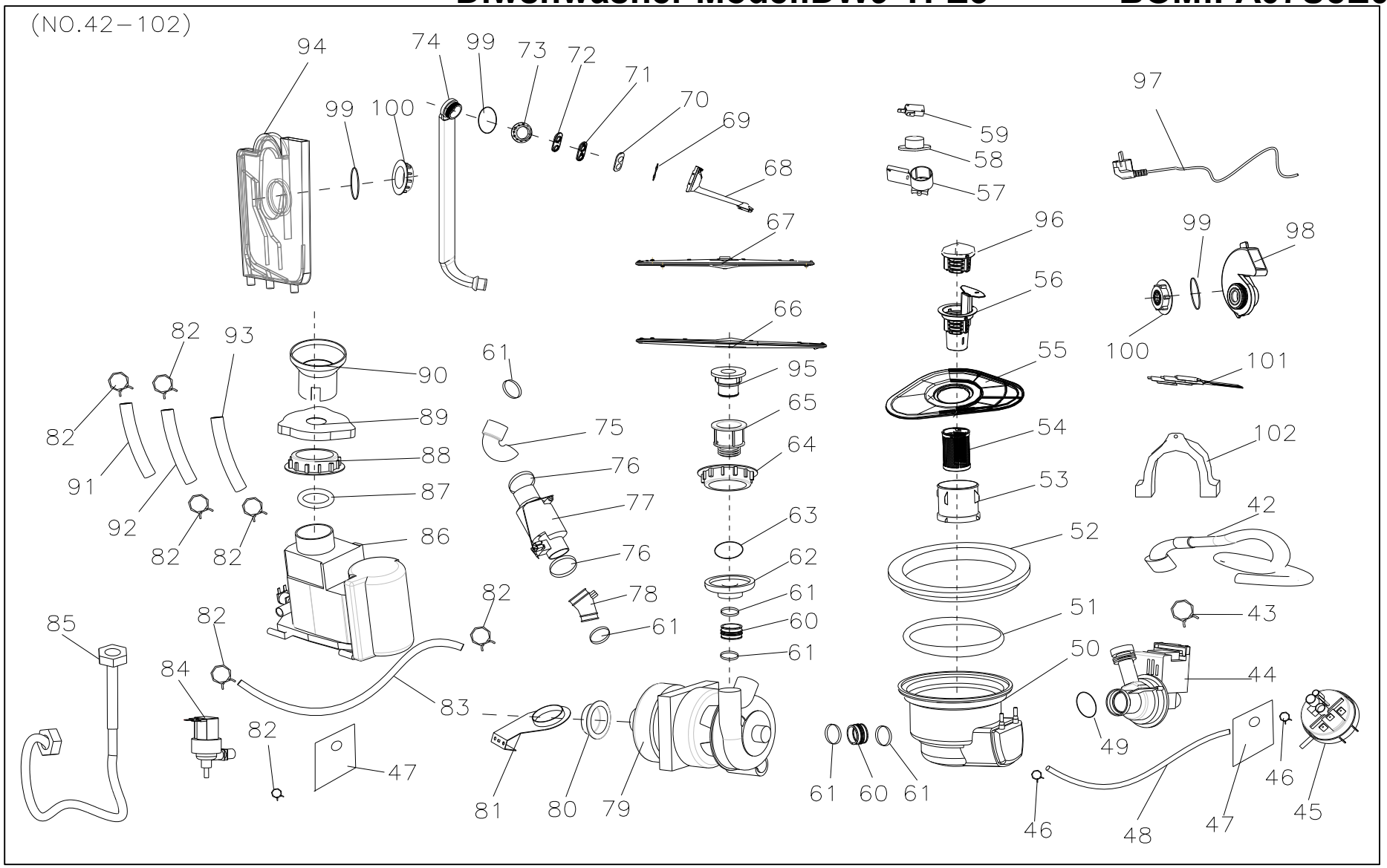

Exploded View

Version:2010-5-5

Haier

Diwshwasher Model:DW9-TFE3 BOM:FA07U8E0000

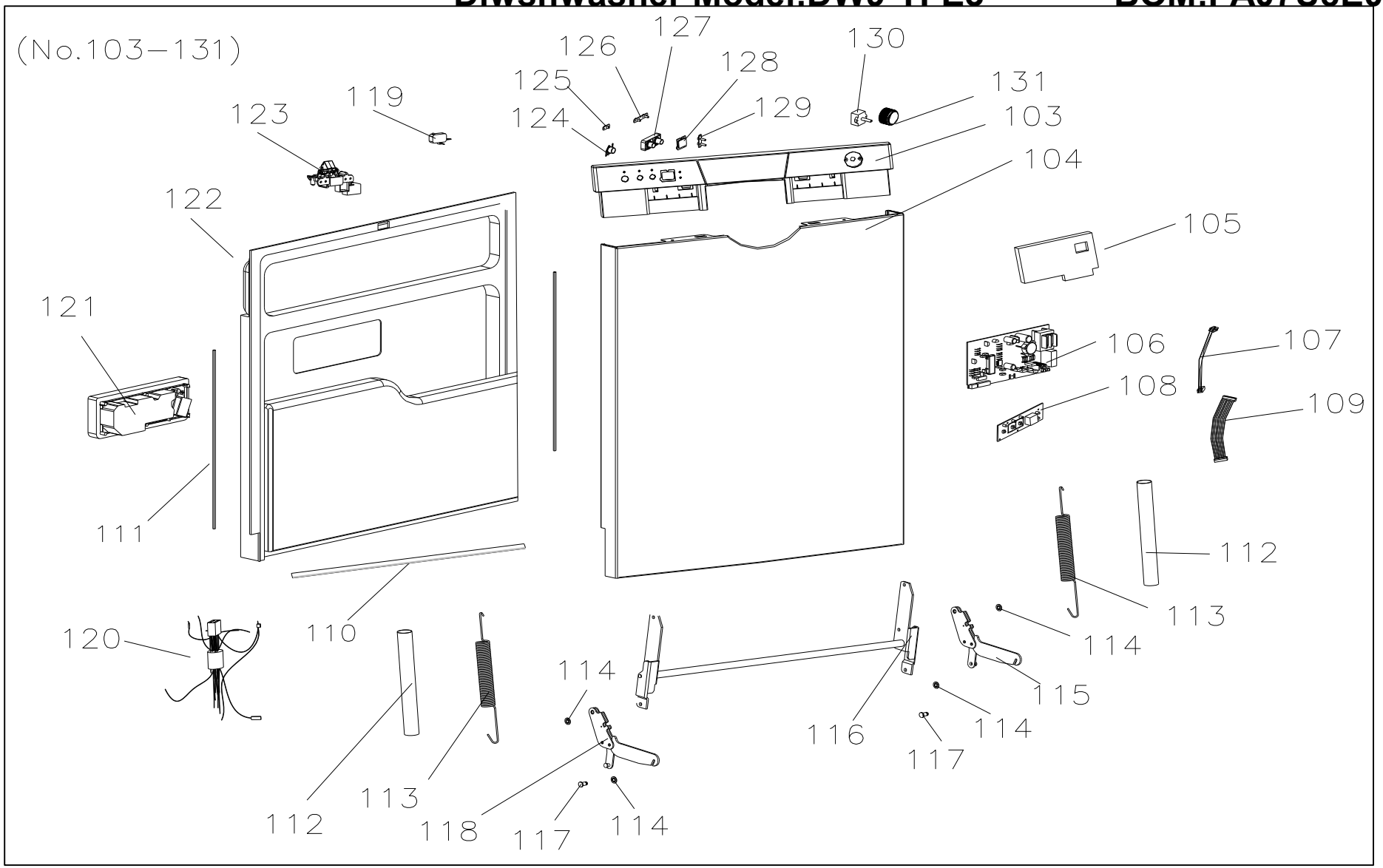

Exploded View

Version:2010-5-5