Haier

Diwshwasher Model:DW9-TFE3-F BOM:FA07U7E0000

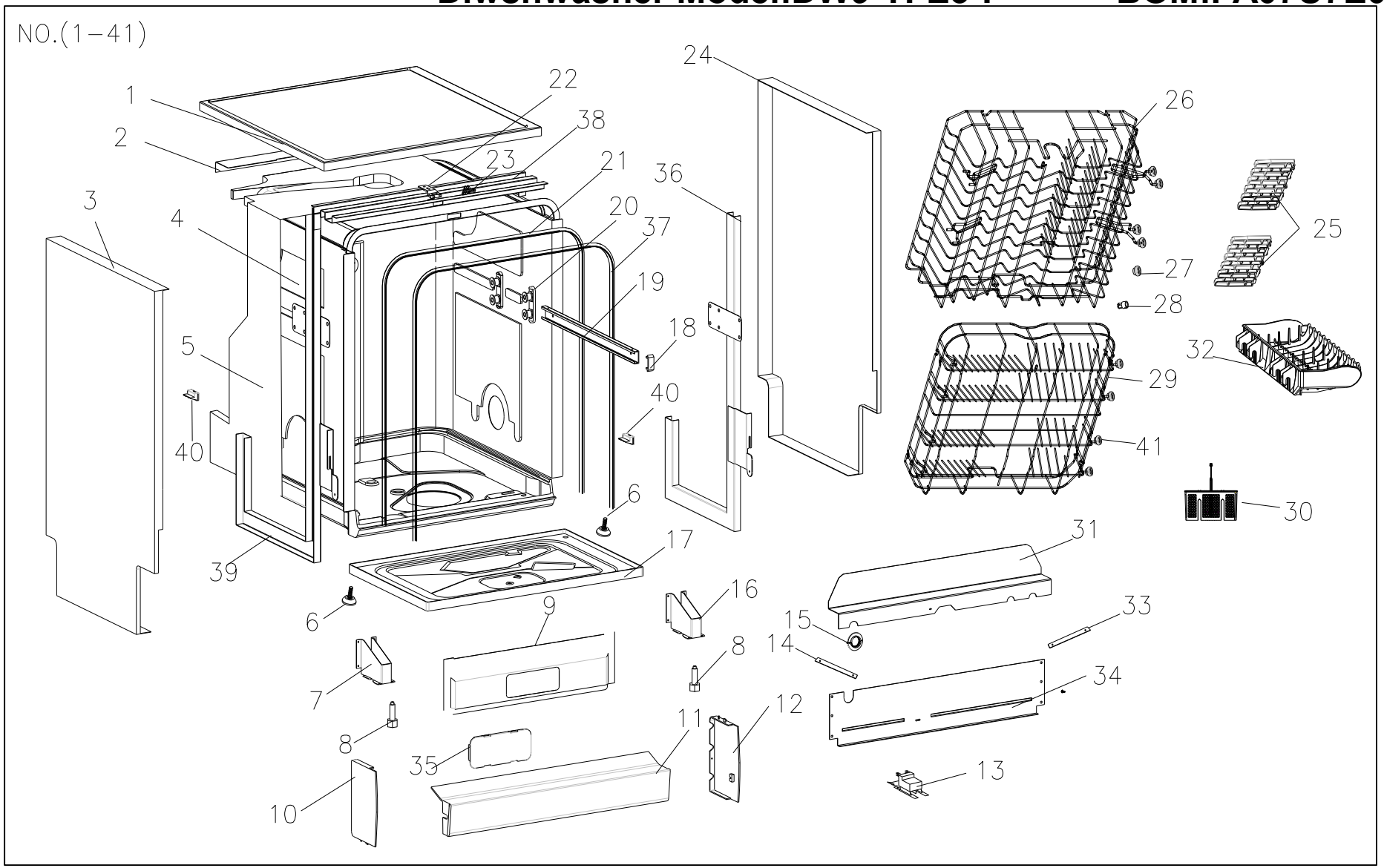

Exploded View

Version:2010-3-19

Haier

Diwshwasher Model:DW9-TFE3-F BOM:FA07U7E0000

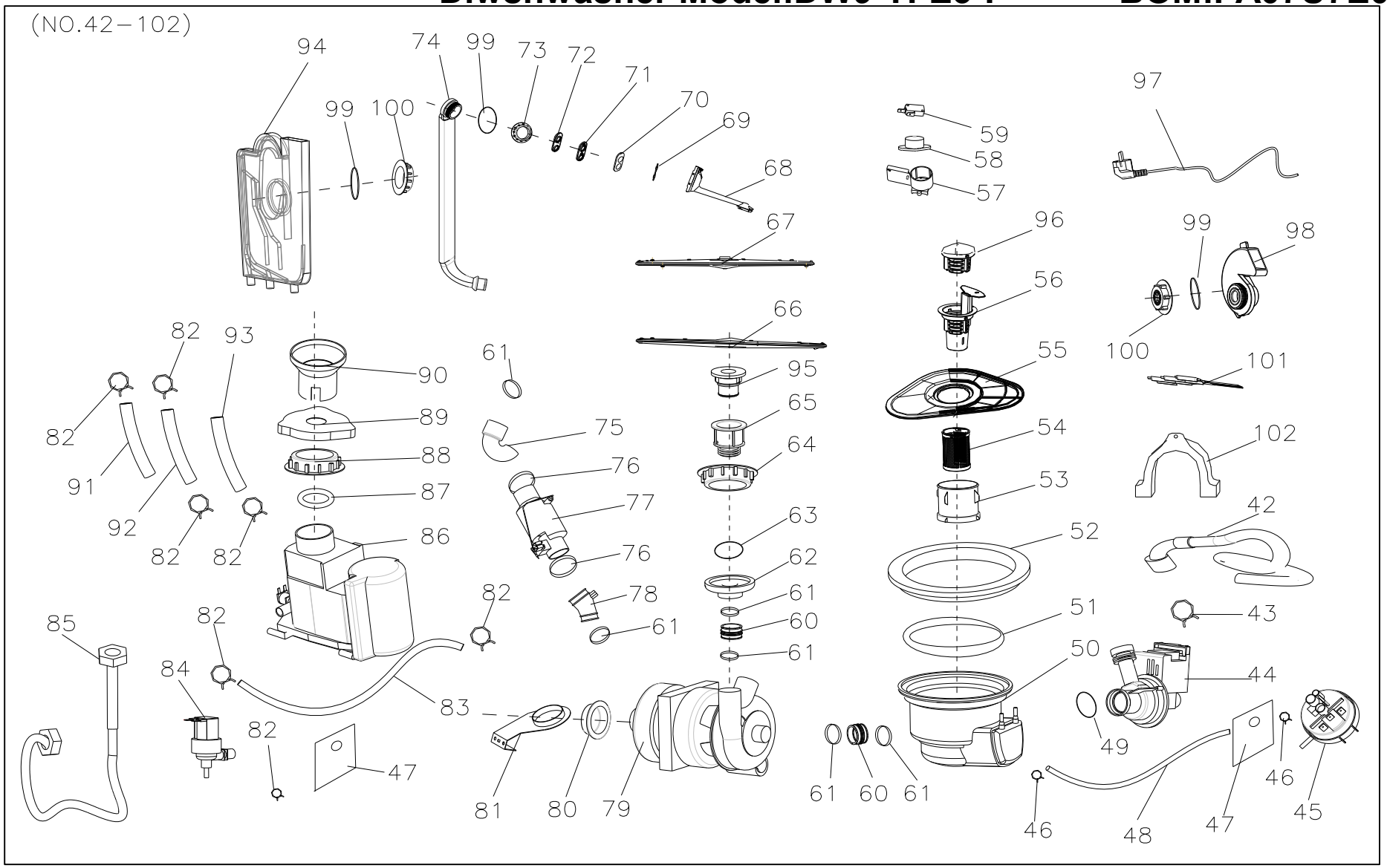

Exploded View

Version:2010-3-19

Haier

Diwshwasher Model:DW9-TFE3-F BOM:FA07U7E0000

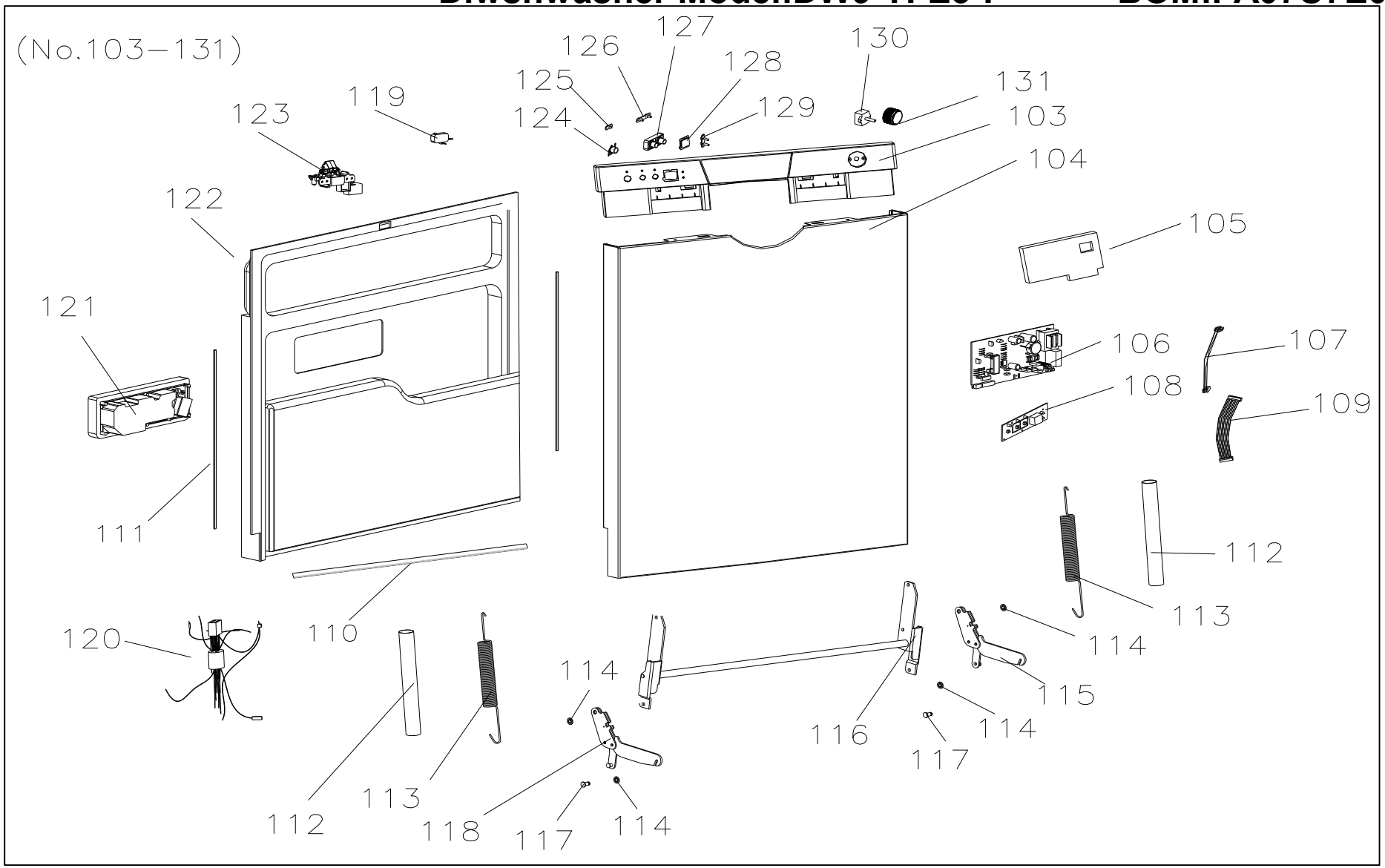

Exploded View

Version:2010-3-19