7. EXPLODED VIEW

▼ The parts of refrigerator and the shape of each part are subject to change in different localities or model name.

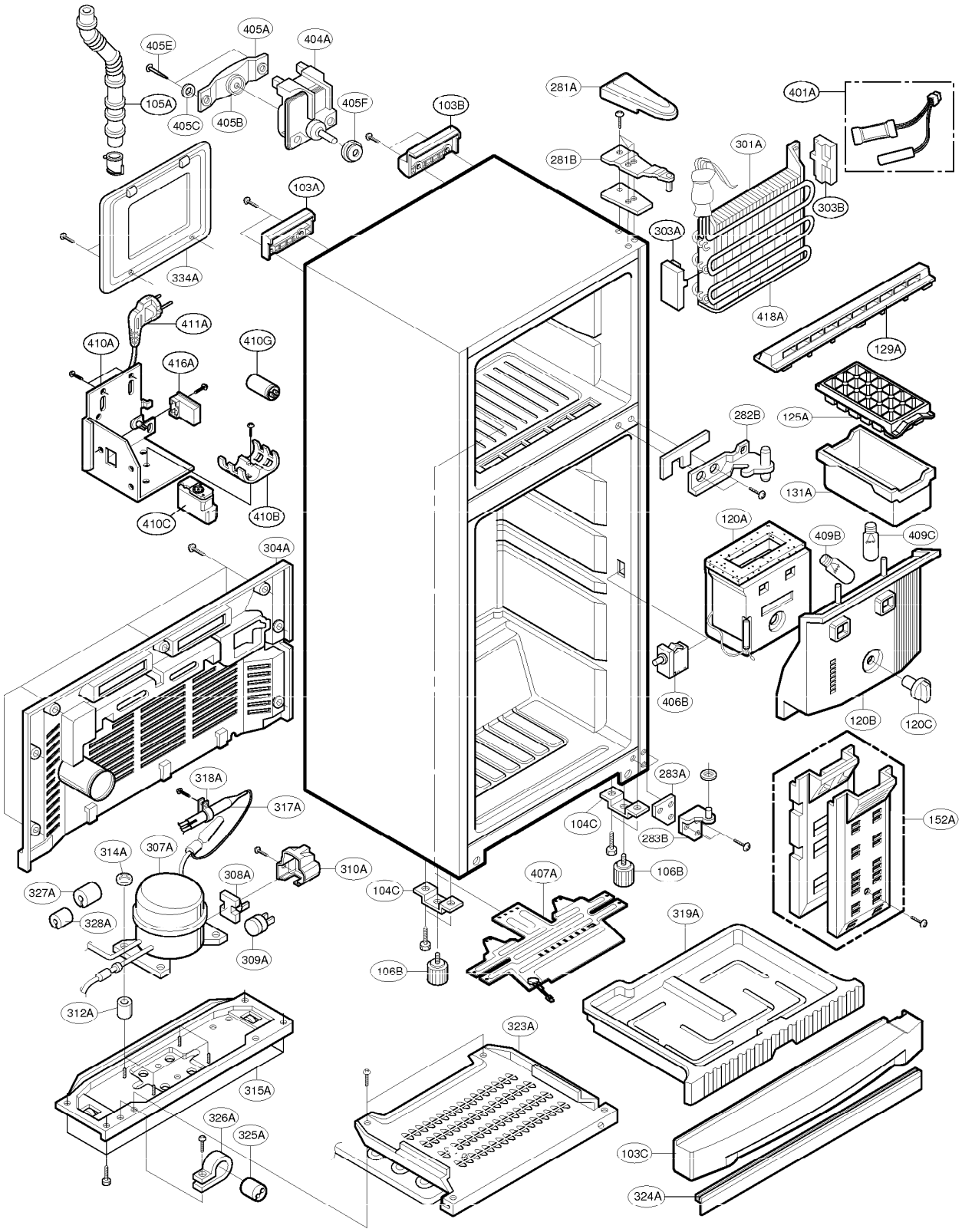

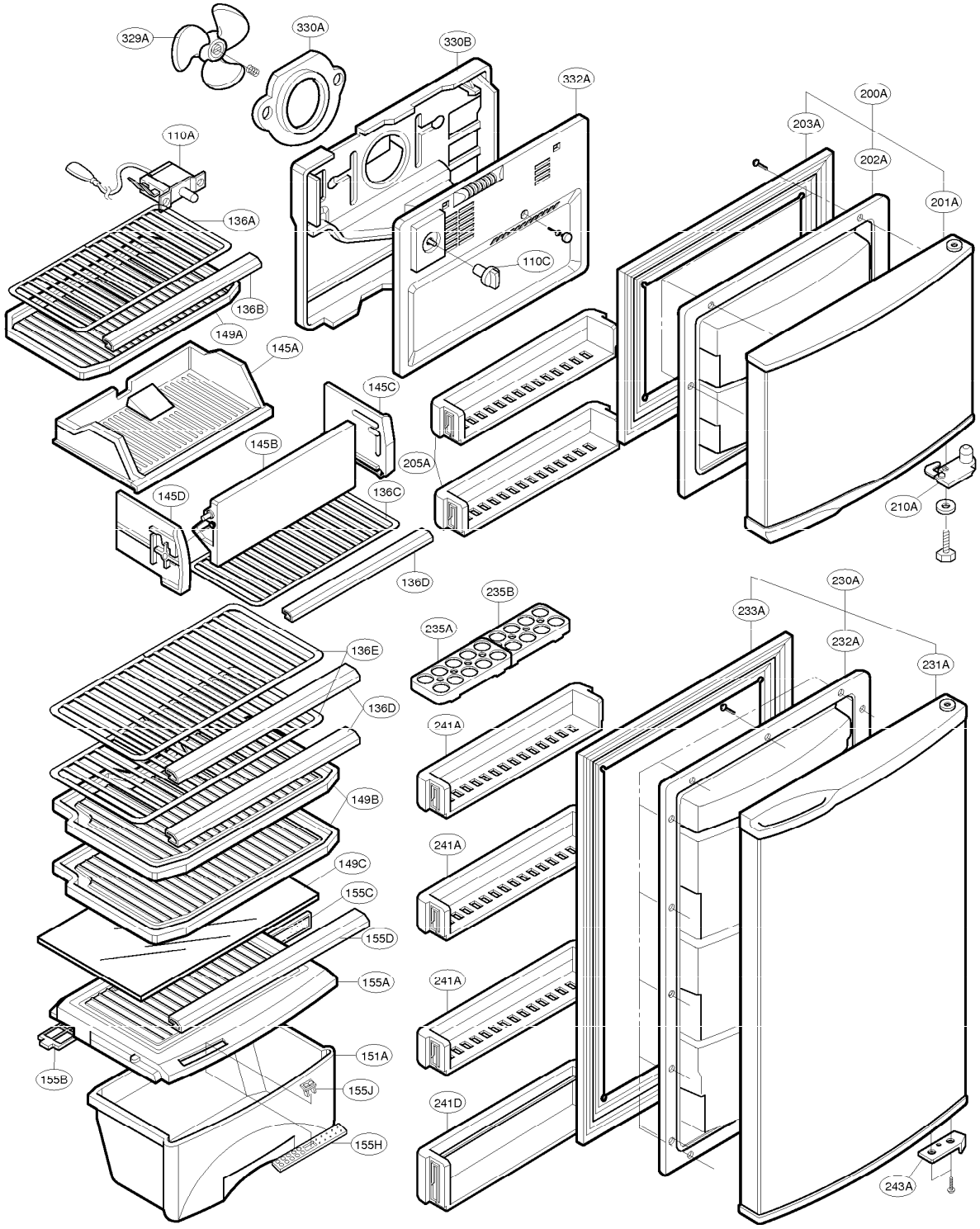
329A
330A
330B
332A
200A
203A
202A
201A
110A
136A
110C
136B
149A
145A
145C
145B
205A
136C
145D
210A
136D
235B
230A
233A
235A
232A
231A
136E
136D
241A
149B
241A
149C
155C
155D
241A
155A
151A
155B
155J
241D
155H
243A