7. EXPLODED VIEW

▼ The parts of refrigerator and the shape of each part are subject to change in different localities or model name.

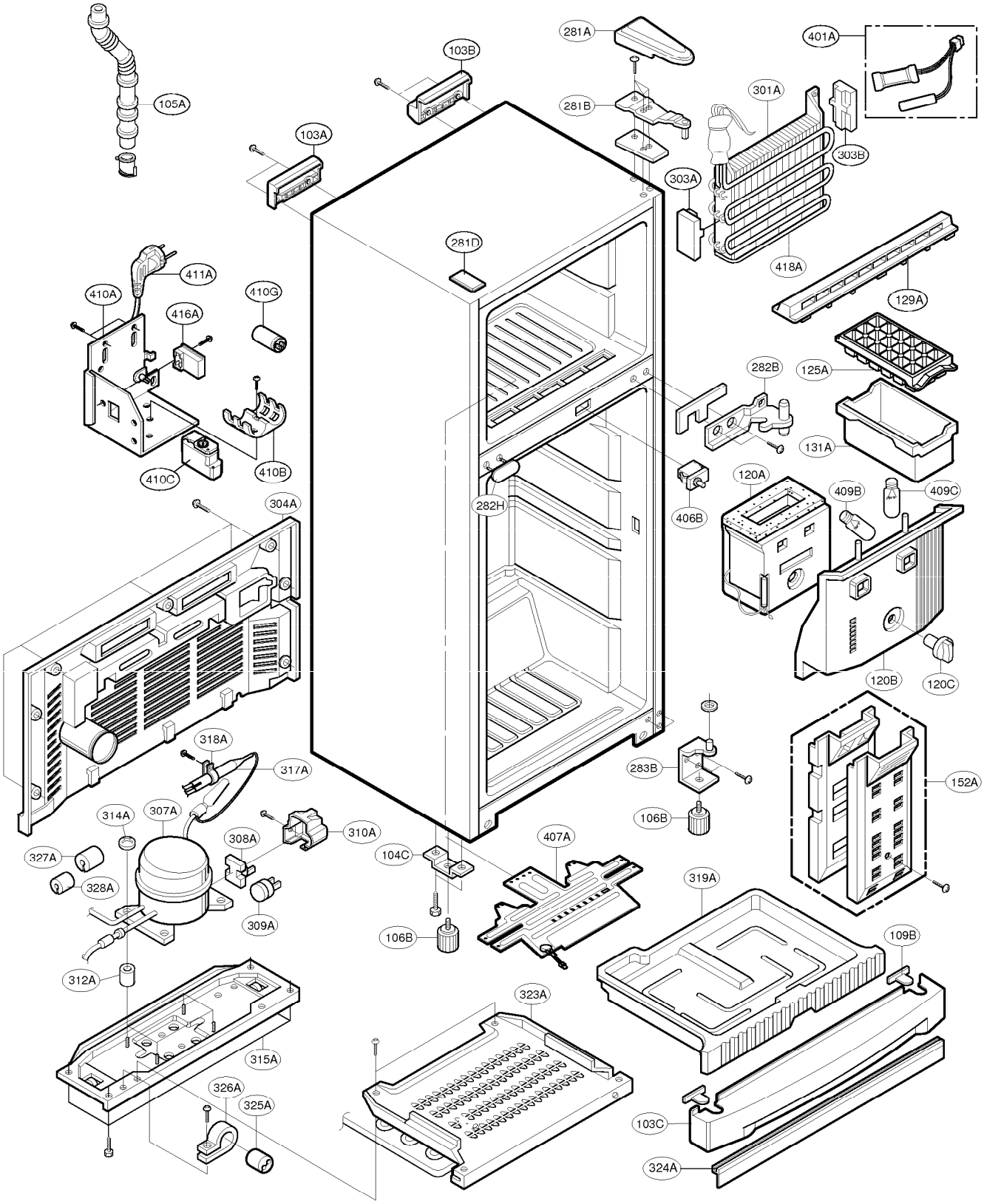

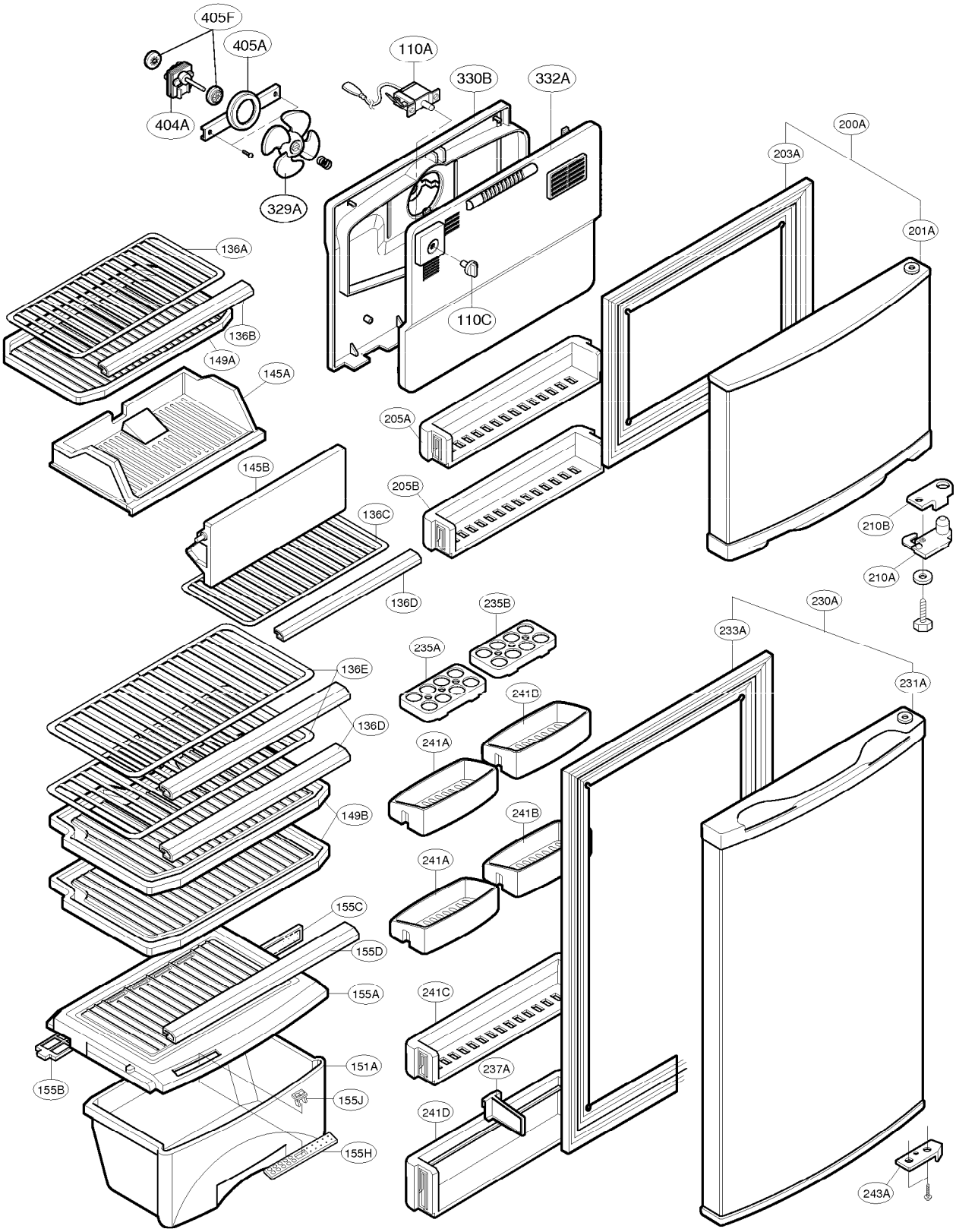
405F
405A
404A
329A
110A
330B
332A
110C
200A
203A
201A
136A
136B
149A
145A
205A
145B
205B
136C
136D
210B
210A
230A
233A
235B
235A
231A
136E
136D
241D
241A
149B
241B
241A
155C
155D
155A
241C
151A
237A
155B
155J
241D
155H
243A