EXPLODED VIEW & REPLACEMENT PARTS LIST

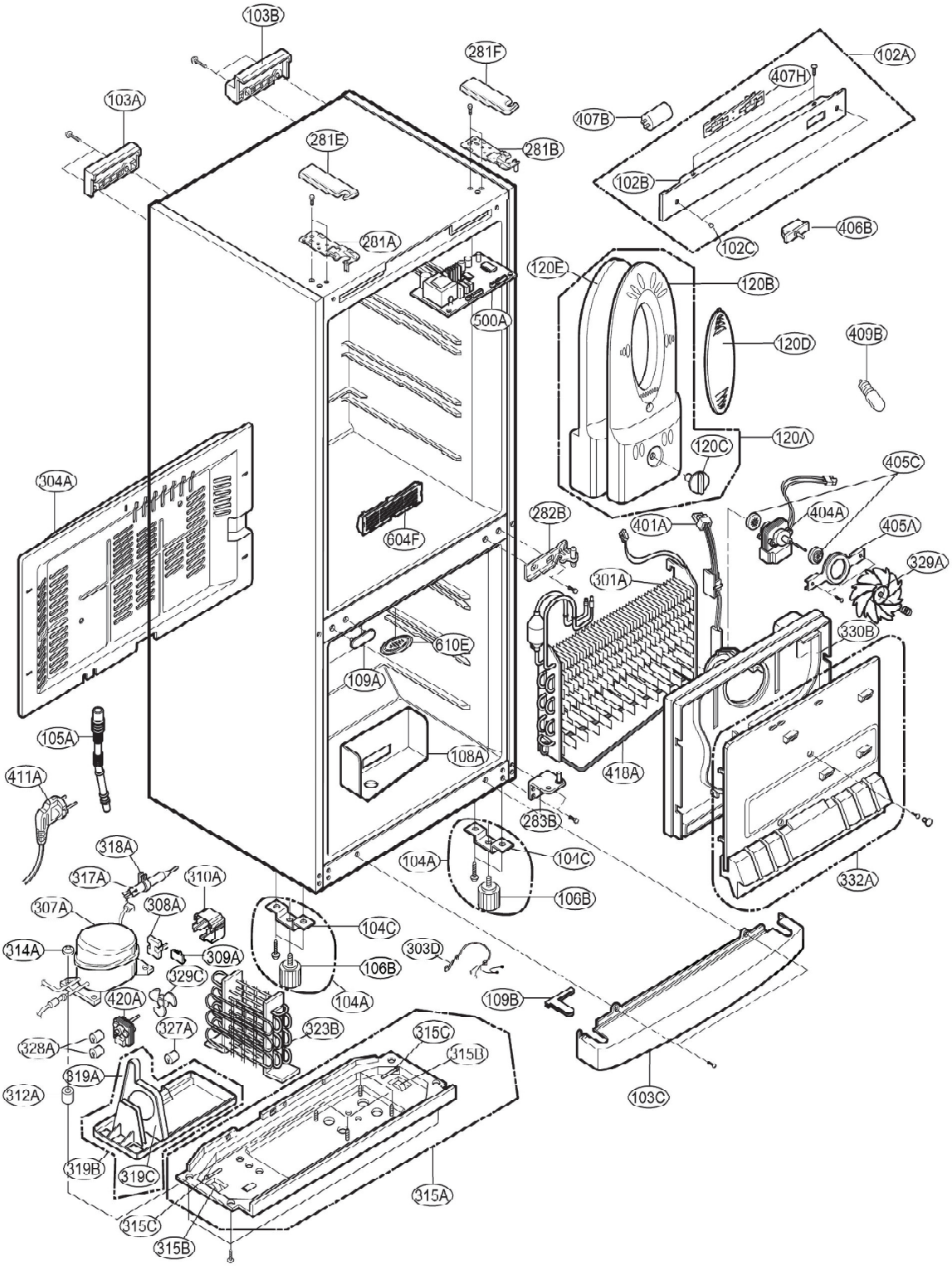
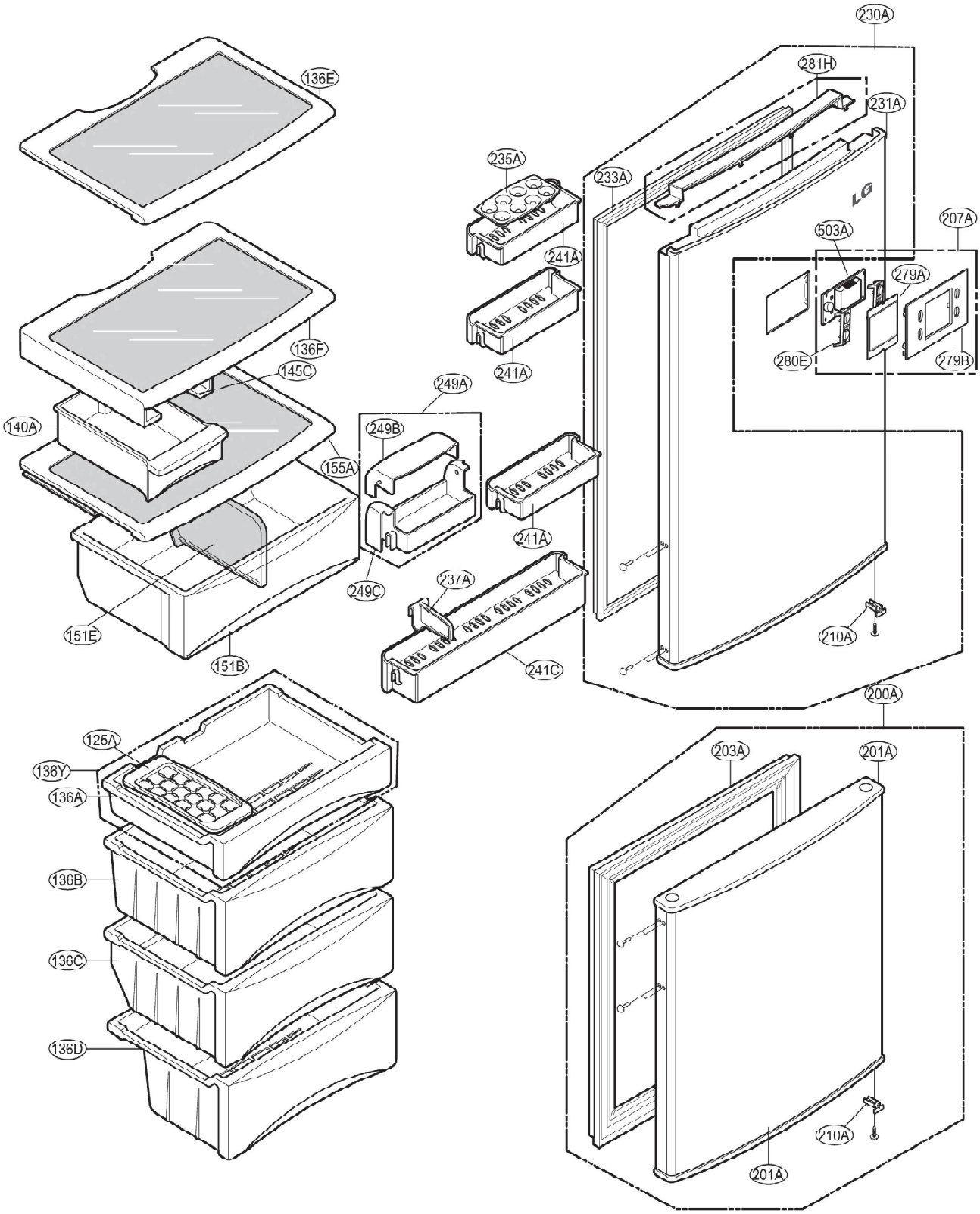
EXPLODED VIEW