7. EXPLODED VIEW

▼ **The parts of refrigerator and the shape of each part are subject to change in different localities or model name.**

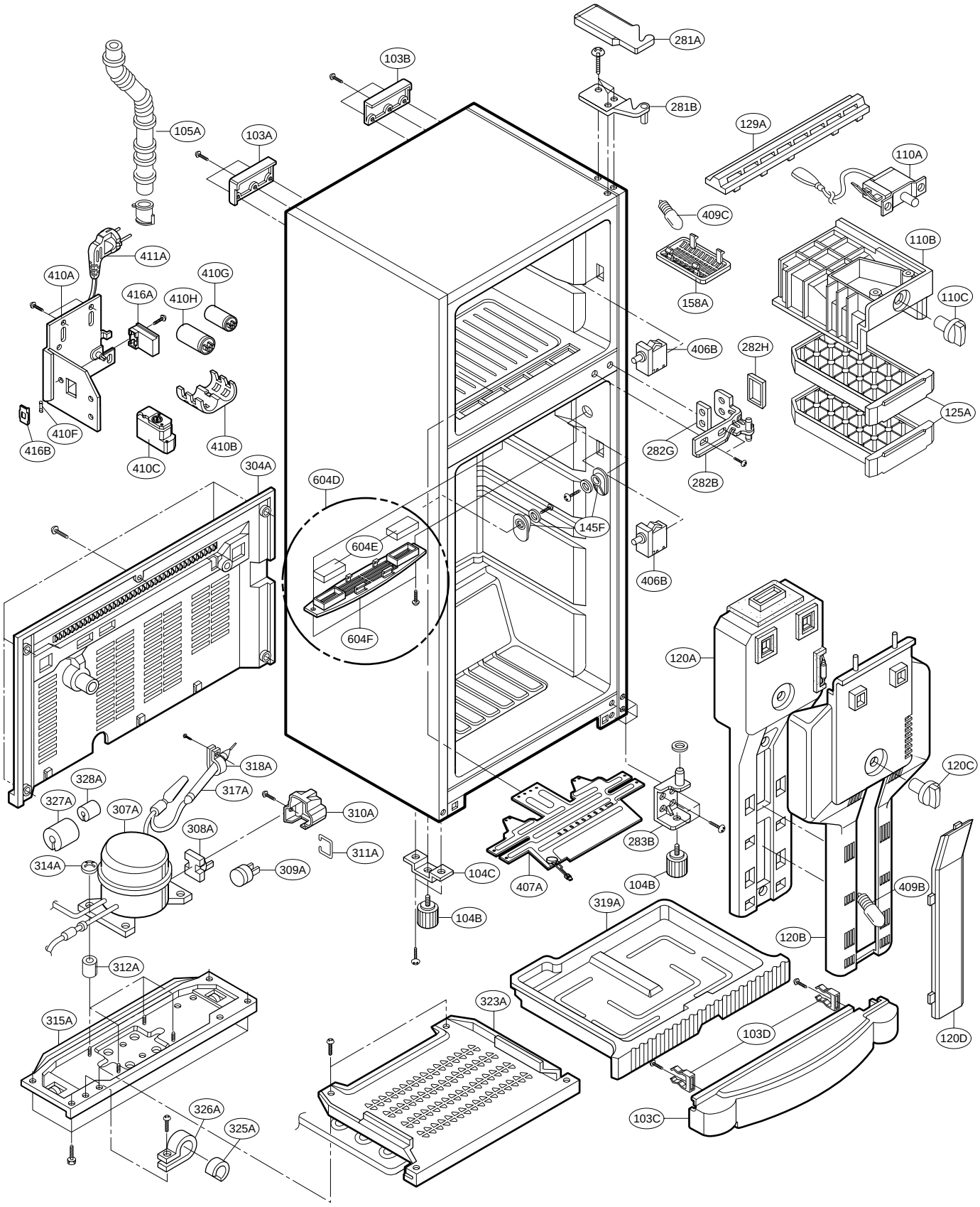

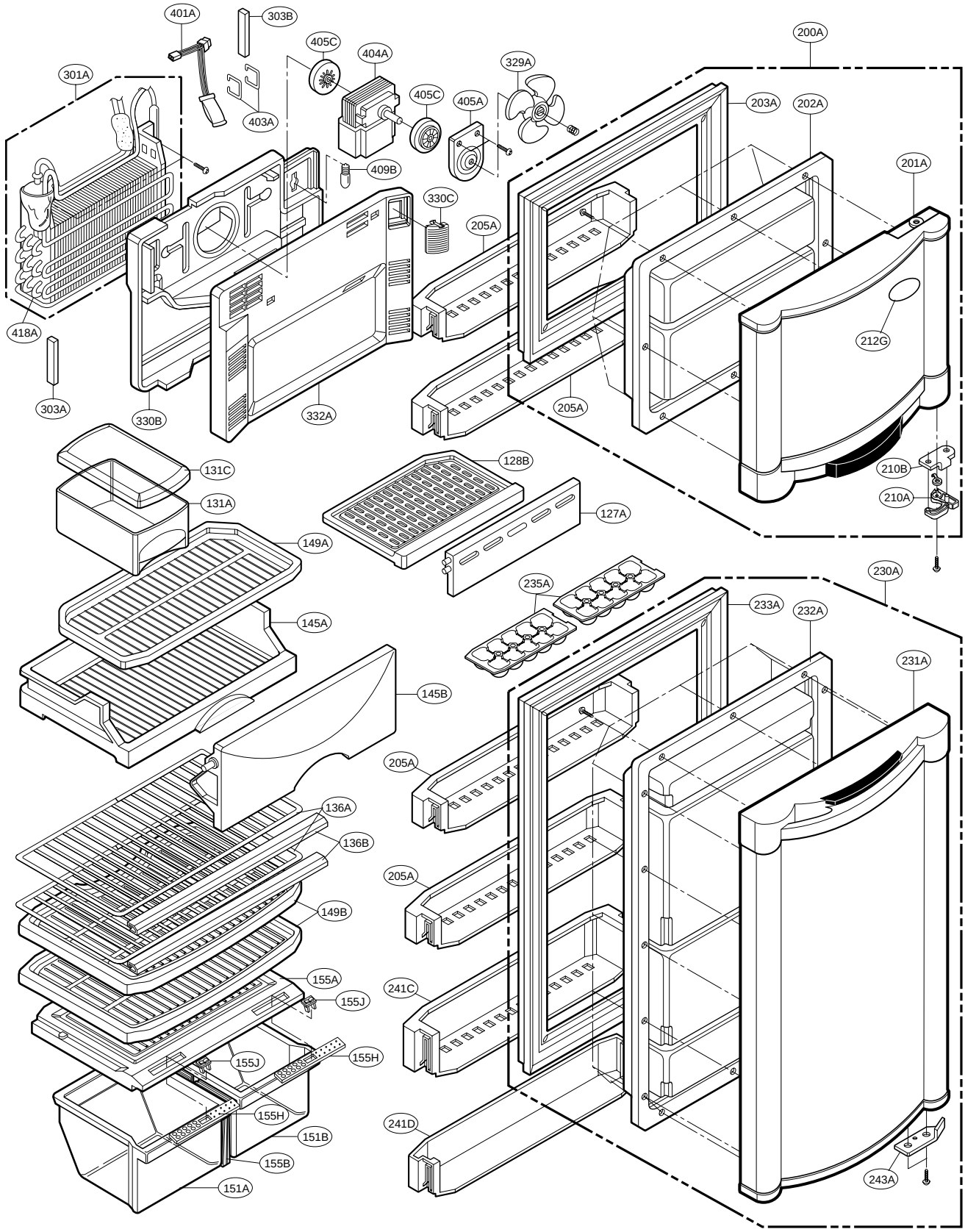
401A
303B
405C
404A
329A
200A
301A
405C
405A
203A
202A
403A
409B
201A
330C
205A
418A
212G
303A
330B
332A
205A
131C
128B
210B
131A
127A
210A
149A
230A
235A
233A
232A
145A
231A
145B
205A
136A
136B
205A
149B
155A
241C
155J
155J
155H
155H
241D
151B
155B
243A
151A