EXPLODED VIEW & REPLACEMENT PARTS LIST

Ref. No : GR-D(Q)429/459B*Y(G,Z)

▼ The parts of refrigerator and the shape of each part are subject to change in different localities.

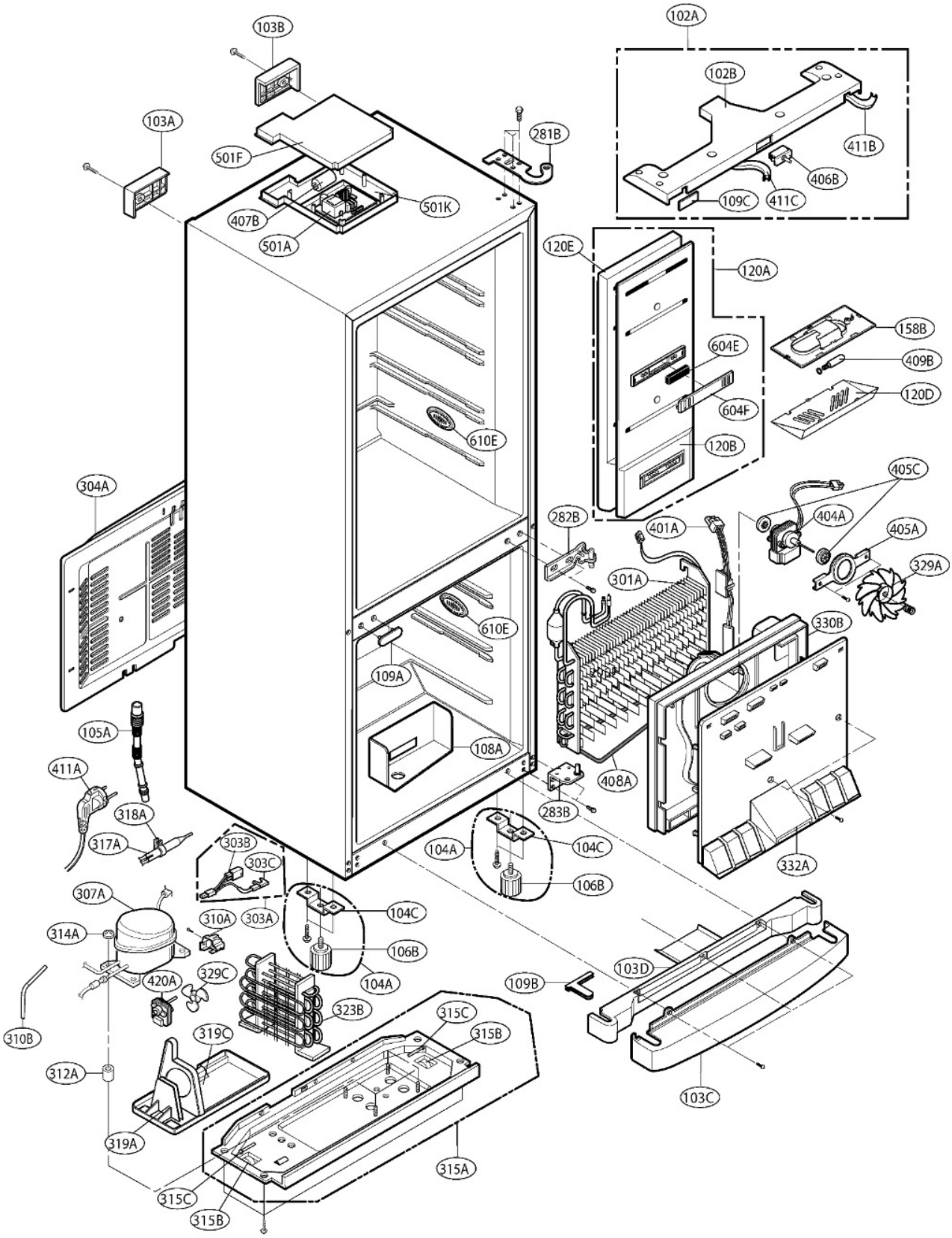

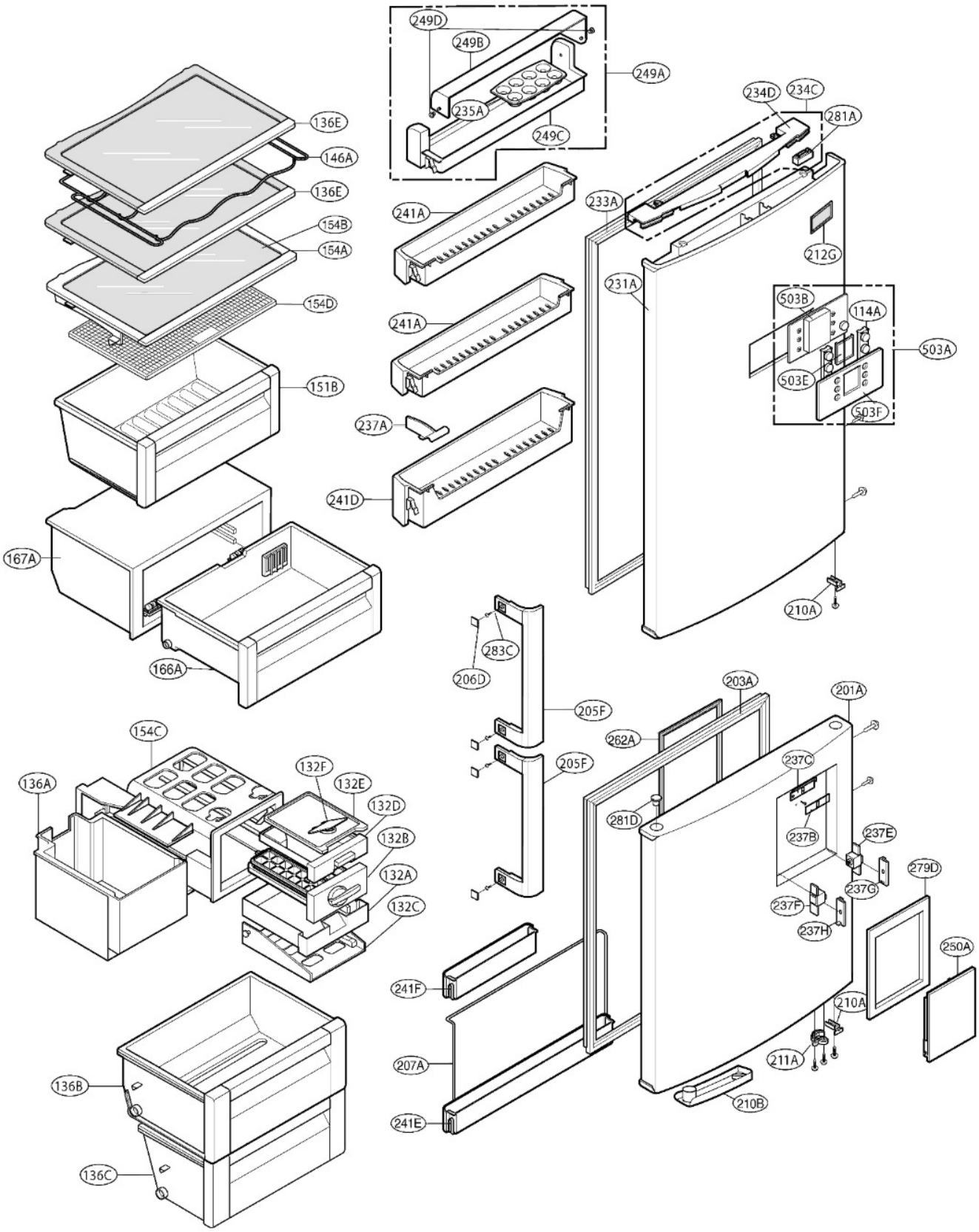
249D
249B
249A
235A
249C
234D
234C
281A
136E
146A
136E
154B
154A
154D
151B
167A
166A
241A
241A
237A
241D
233A
212G
231A
503B
114A
503A
503E
503F
210A
283C
206D
205F
205F
203A
201A
262A
237C
281D
237B
237E
279D
237G
237F
237H
250A
210A
211A
210B
241F
207A
241E
154C
136A
132F
132E
132D
132B
132A
132C
136B
136C