EXPLODED VIEW & REPLACEMENT PARTS LIST

Ref. No : GR-D(Q)429/459B*Y(G,Z)

▼ The parts of refrigerator and the shape of each part are subject to change in different localities.

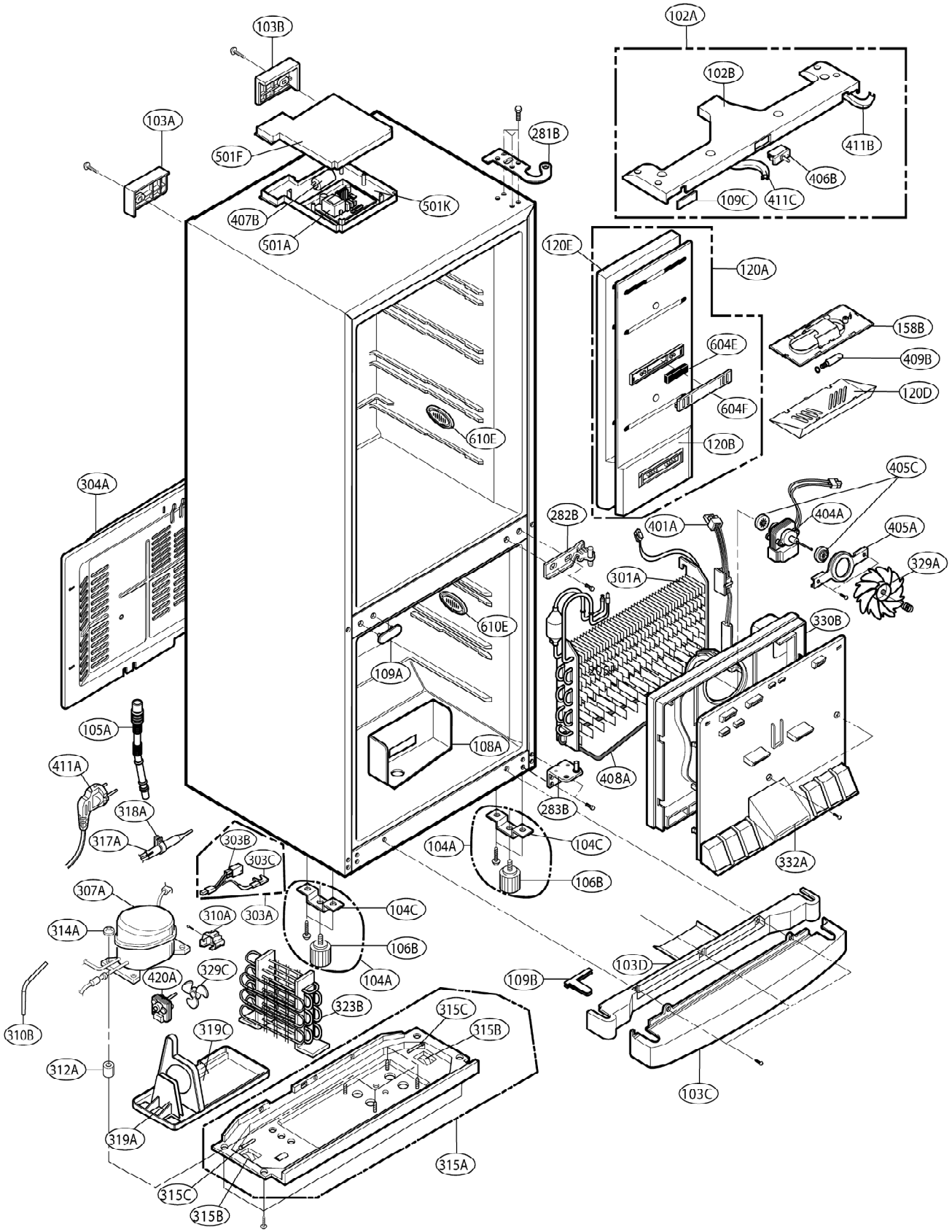

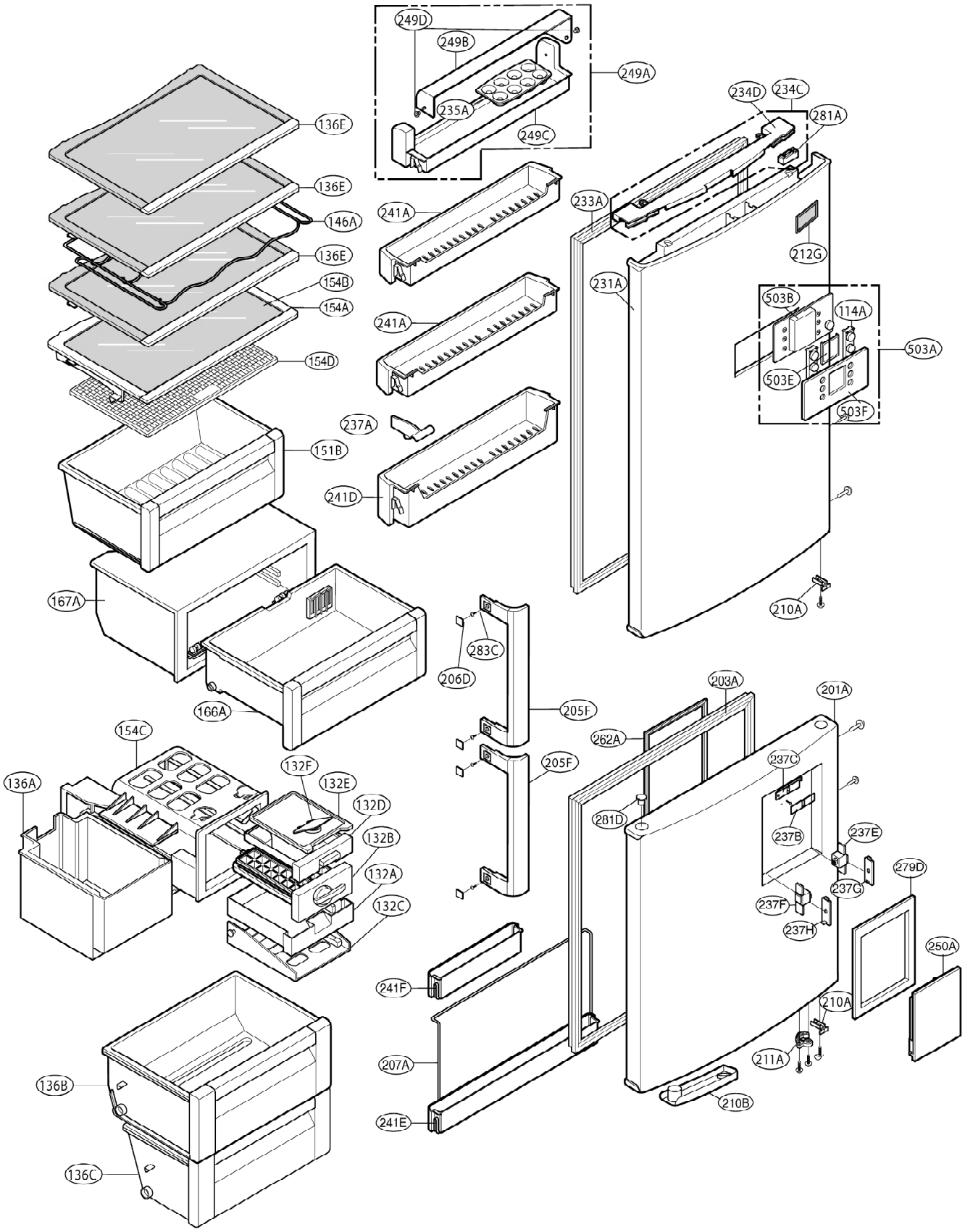
249D
249B
249A
235A
249C
234D
234C
281A
136F
136E
146A
136E
154B
154A
154D
241A
233A
212G
231A
503B
114A
503A
503E
503F
241A
237A
151B
241D
167A
210A
283C
206D
203A
201A
166A
205F
262A
154C
237C
205F
136A
132F
132E
132D
281D
237B
237E
132B
132A
279D
237G
132C
237F
237H
250A
241F
210A
211A
207A
136B
210B
241E
136C