8-3. GR-642TVP

▼ The parts of refrigerator and the shape of each part are subject to change in different localities.
▼ Capacitors and fuse are optional parts.

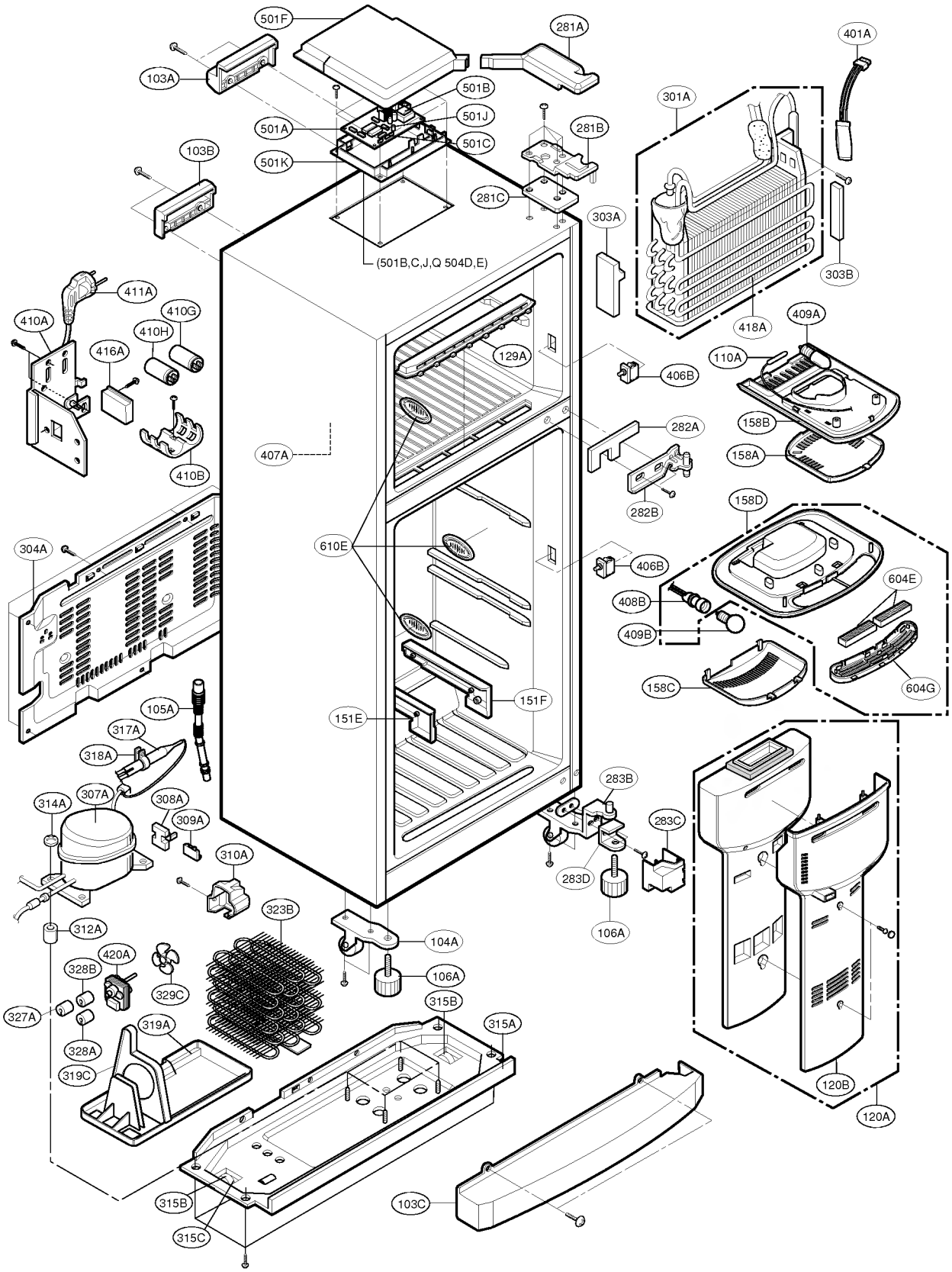

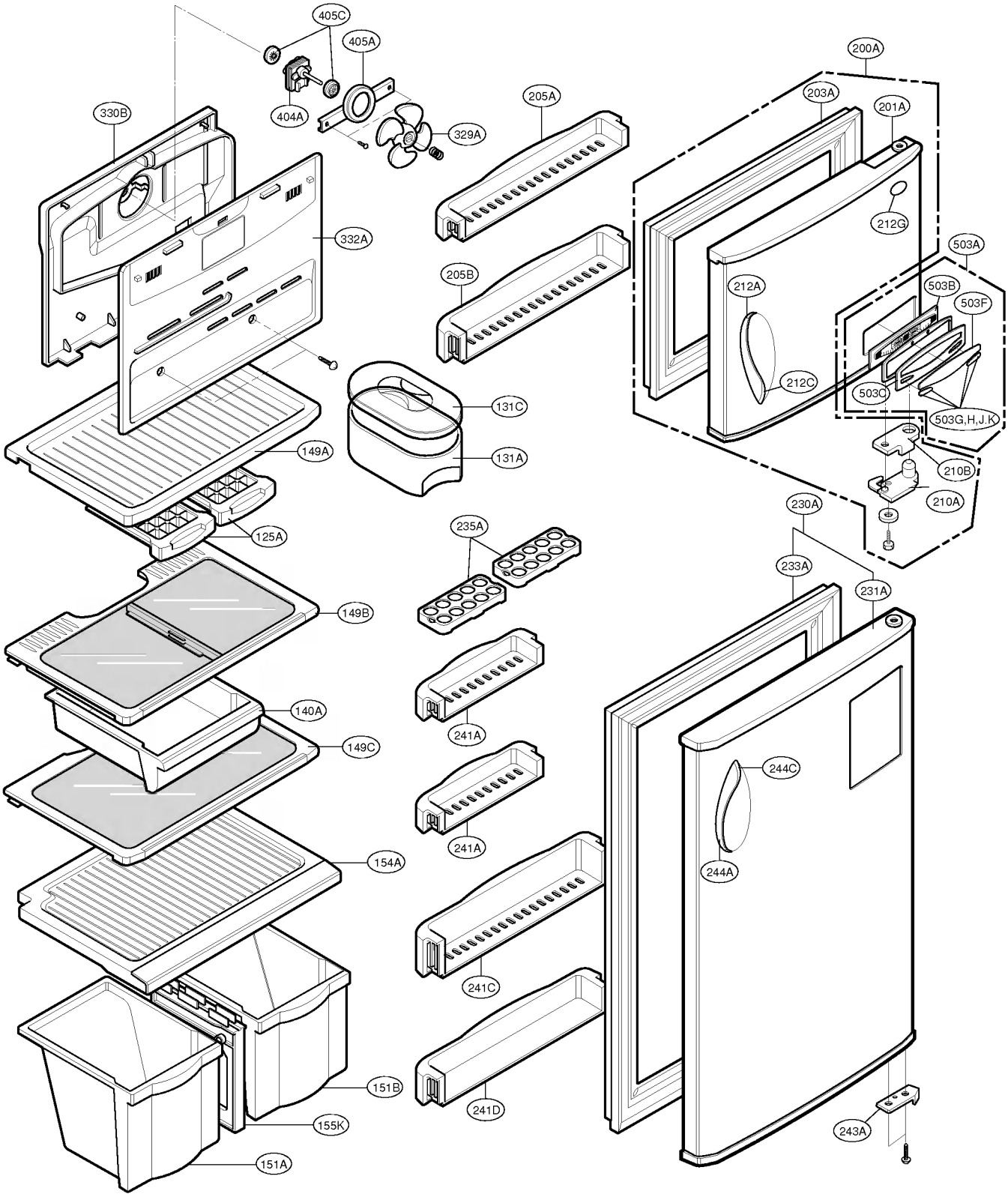
405C
405A
404A
329A
330B
332A
205A
205B
200A
203A
201A
212G
503A
503B
503F
212A
212C
503C
503G,H,J,K
210B
210A
131C
131A
149A
125A
235A
230A
233A
231A
149B
140A
241A
149C
244C
244A
154A
241C
151B
241D
155K
243A
151A

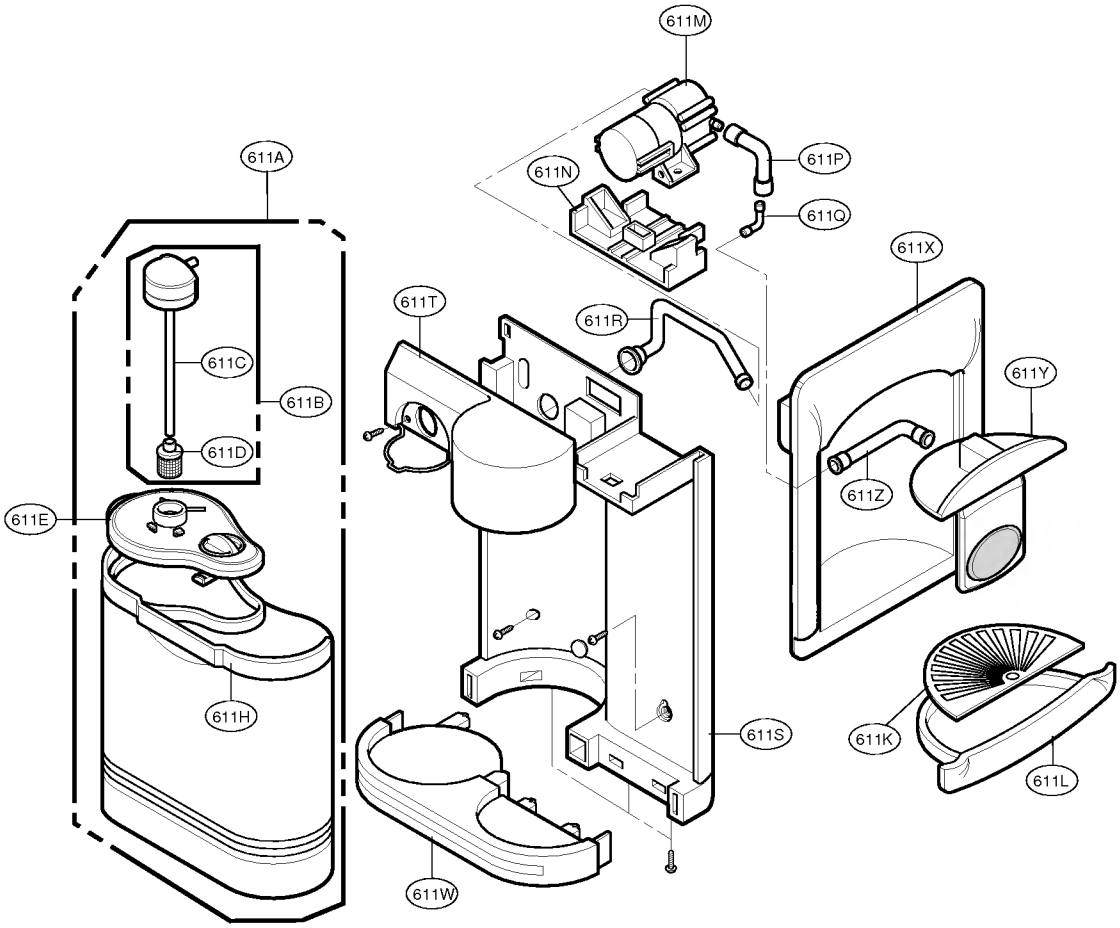
611M
611A
611N
611P
611Q
611X
611T
611R
611C
611B
611Y
611D
611Z
611E
611H
611S
611K
611L
611W