EXPLODED VIEWS

1. CABINET AND MAIN FRAME SECTION

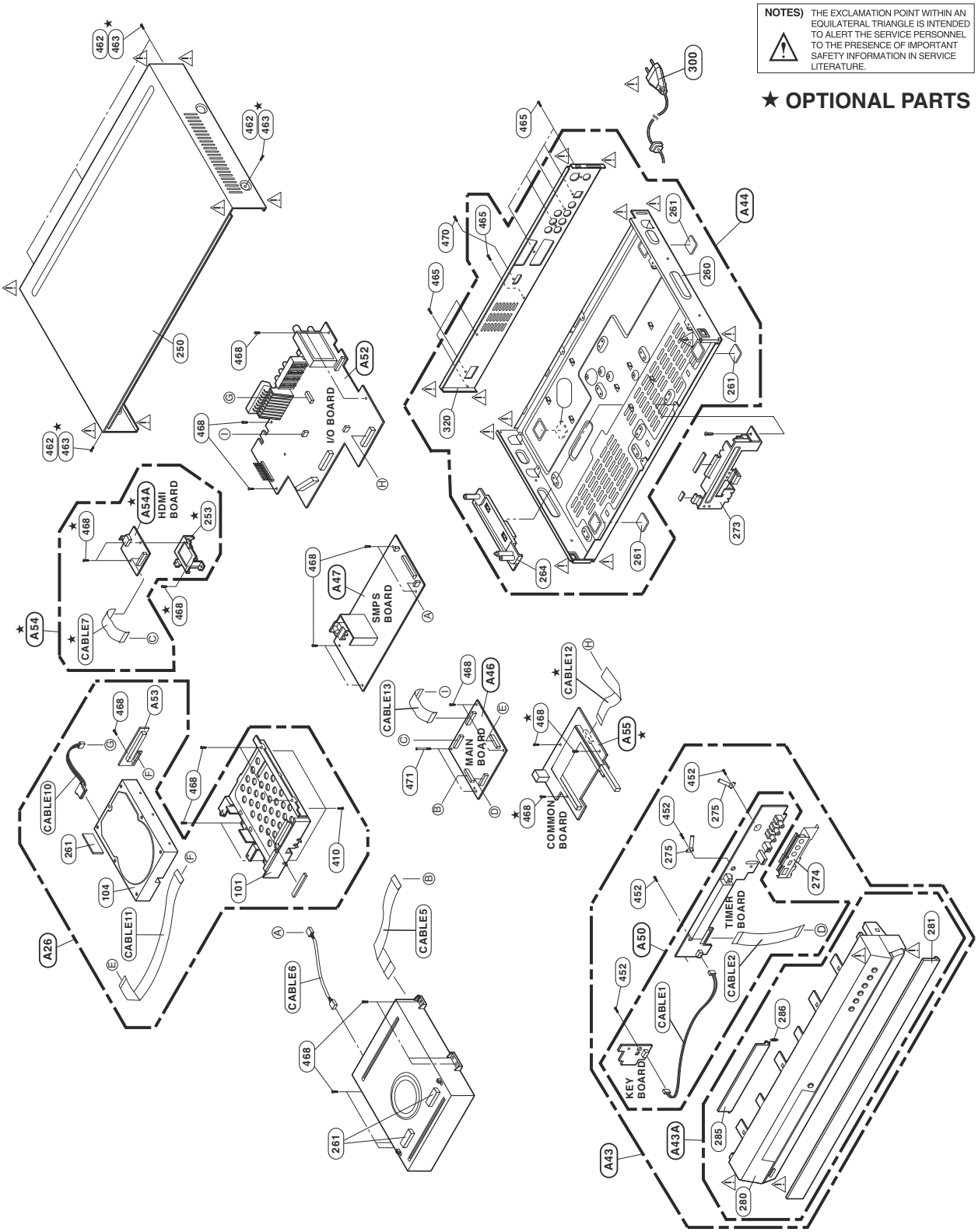

Copyright © 2008 LG Electronics. Inc. All right reserved.
Only for training and service purposes

2. DECK MECHANISM SECTION (RS-06A)

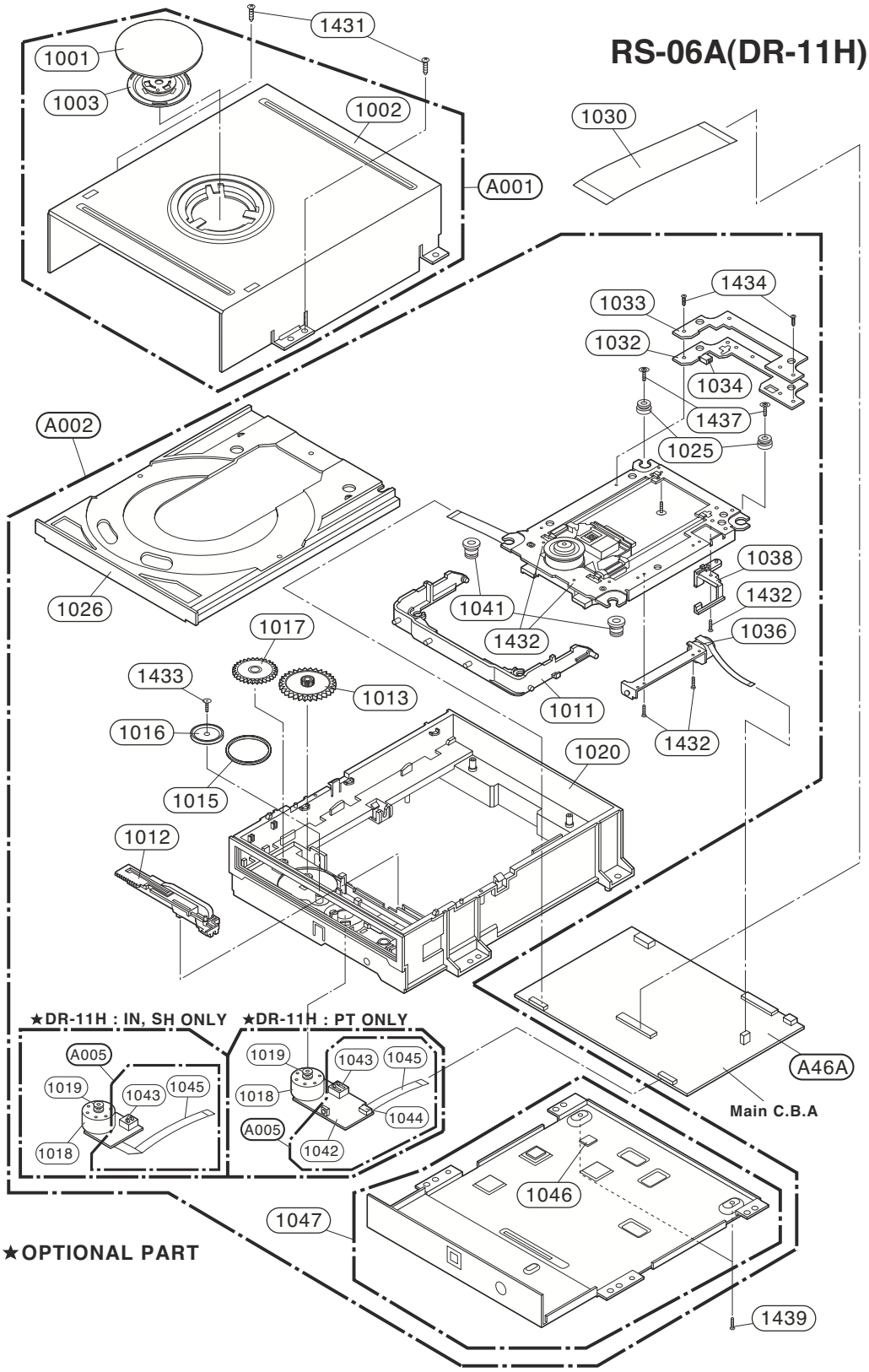

Copyright © 2008 LG Electronics. Inc. All right reserved.
Only for training and service purposes

LGE Internal Use Only

3. PACKING ACCESSORY SECTION

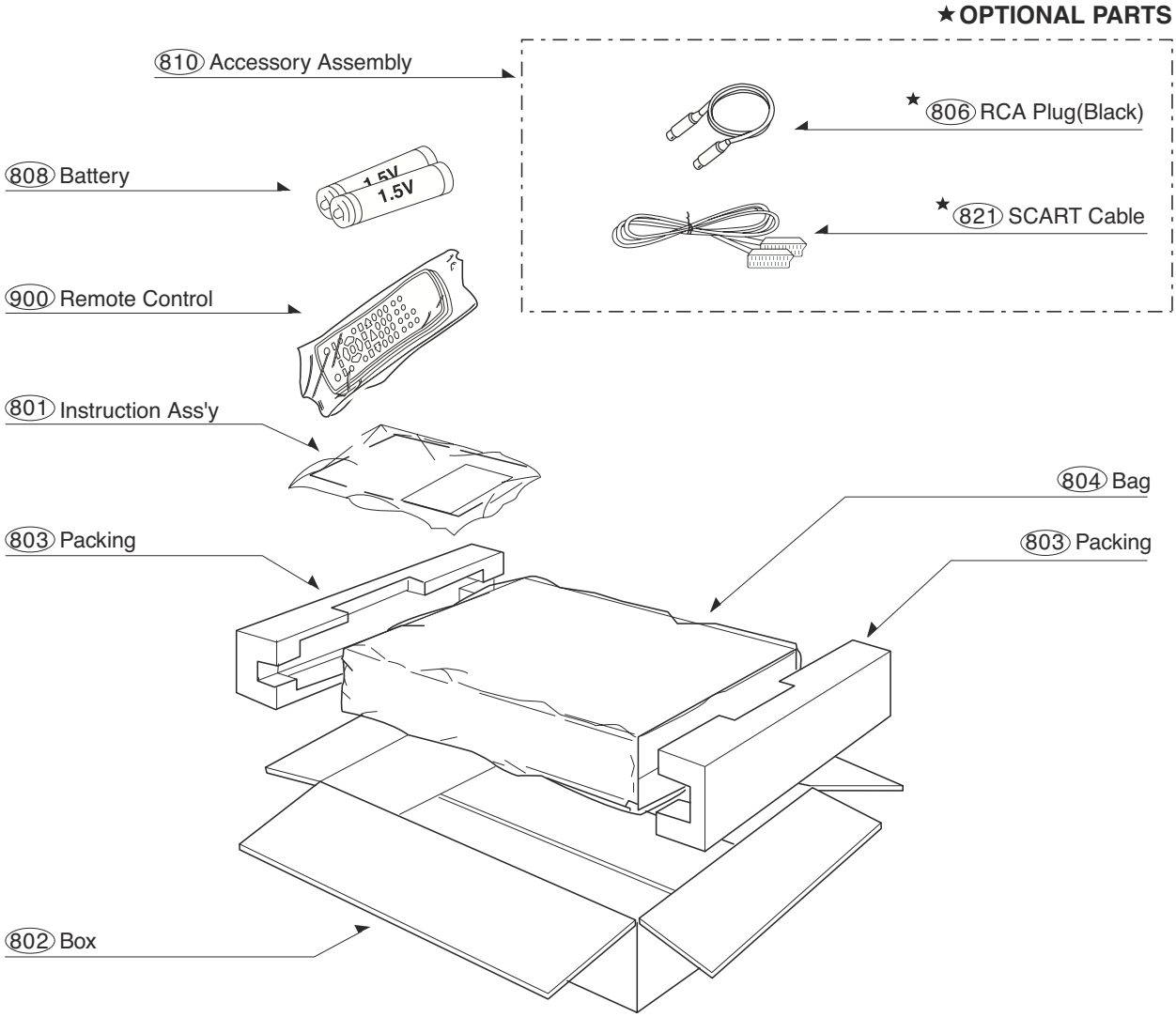

Copyright © 2008 LG Electronics. Inc. All right reserved.
Only for training and service purposes