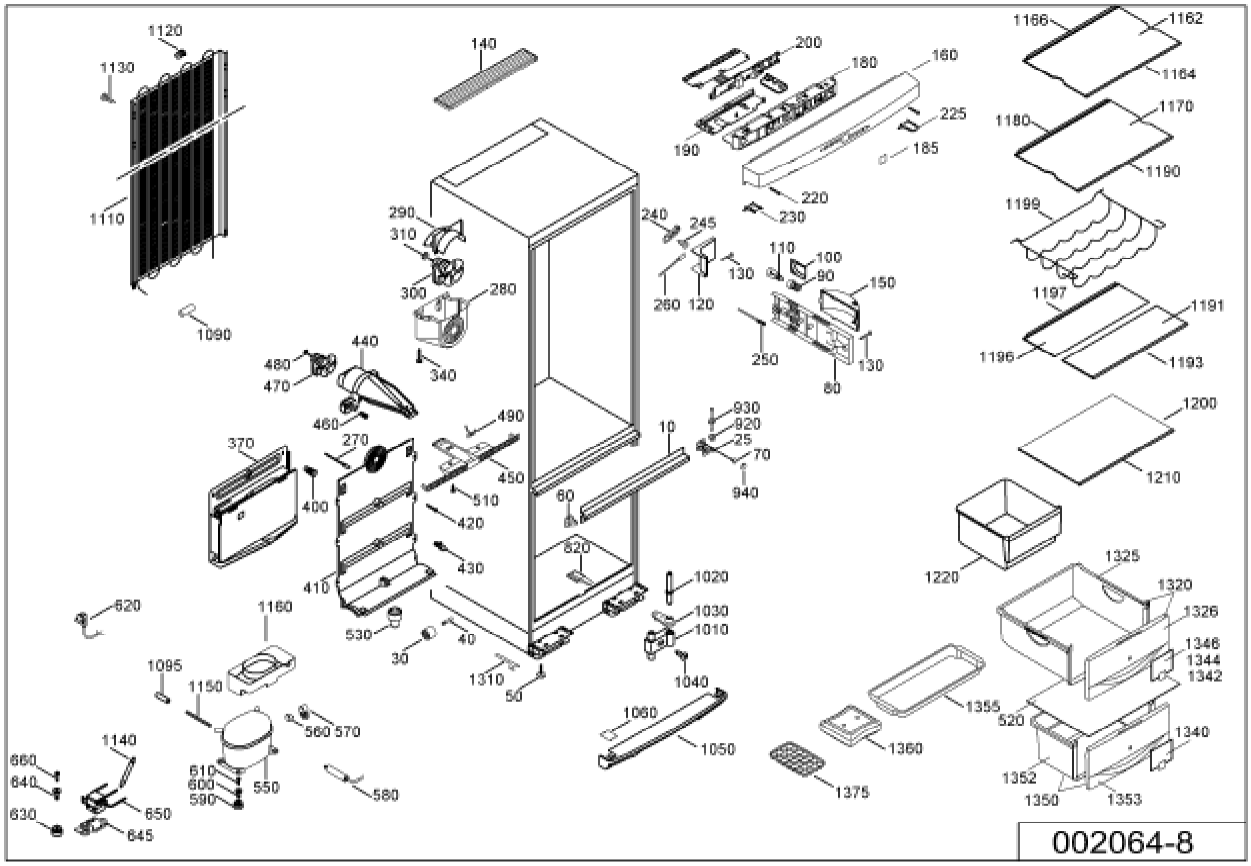Design/001/CN/CN 3366-20K/spare parts list