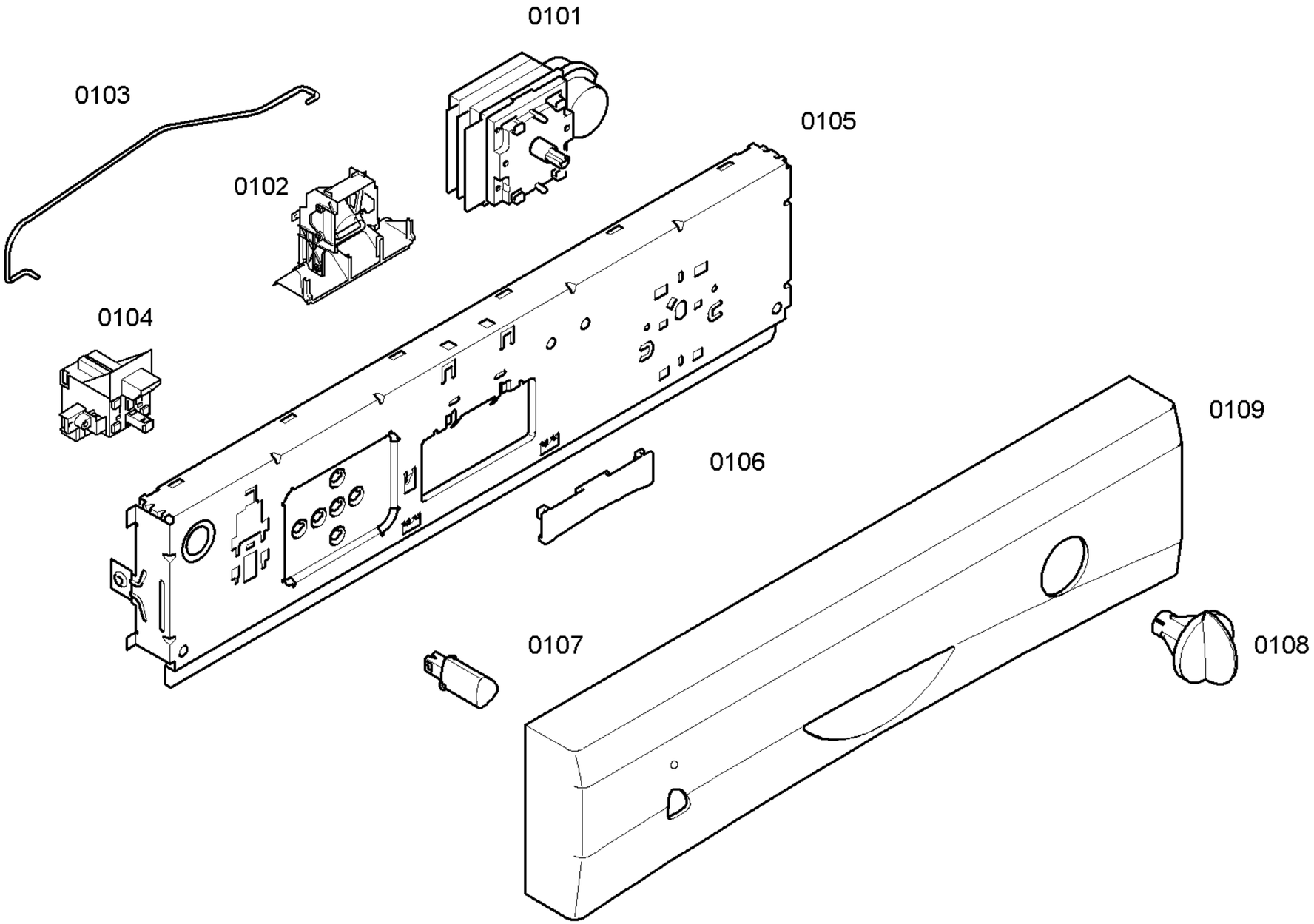

Copyright © (2020) by Lynx / 205502

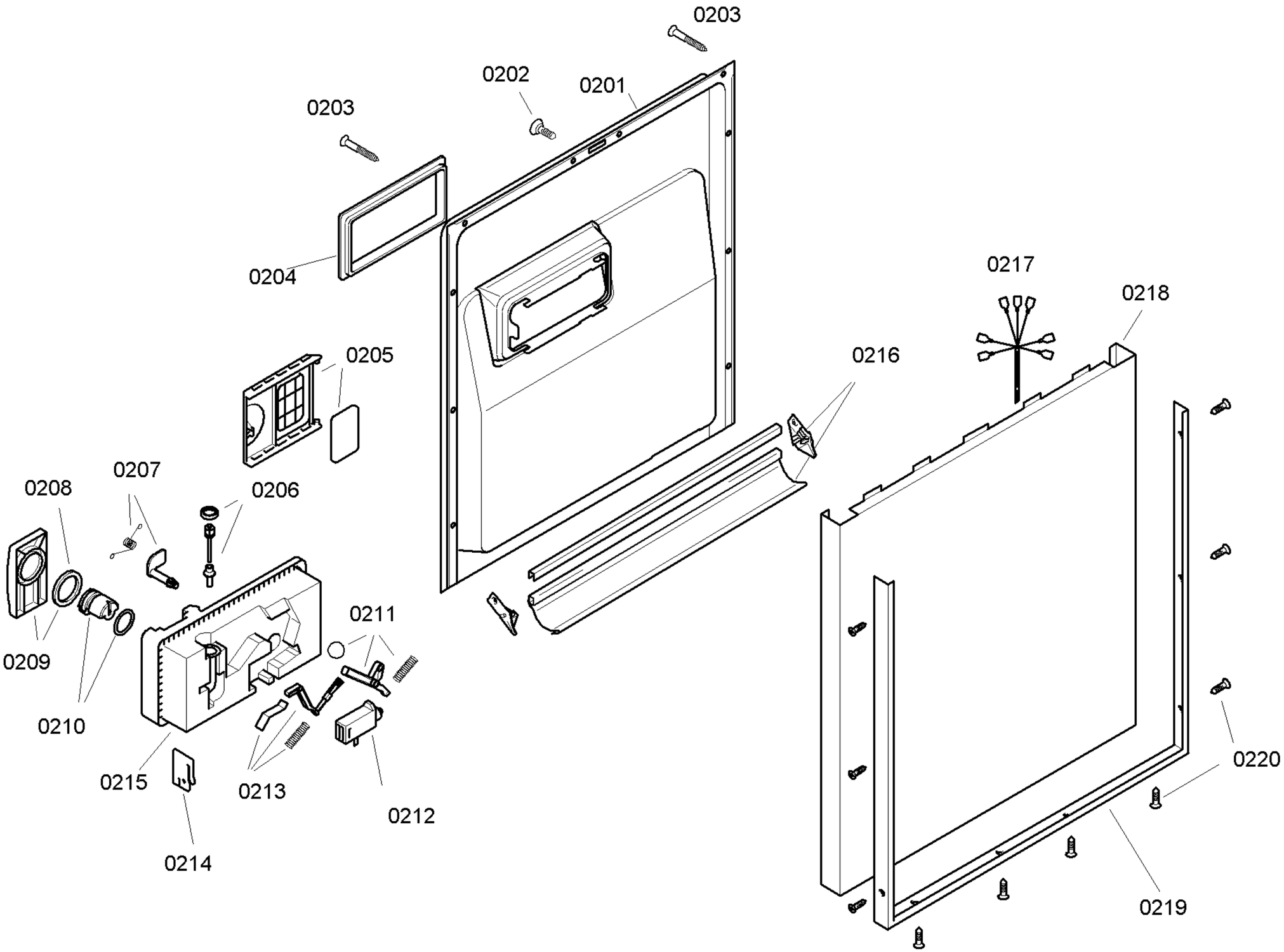

Copyright © (2020) by Lynx / 205502

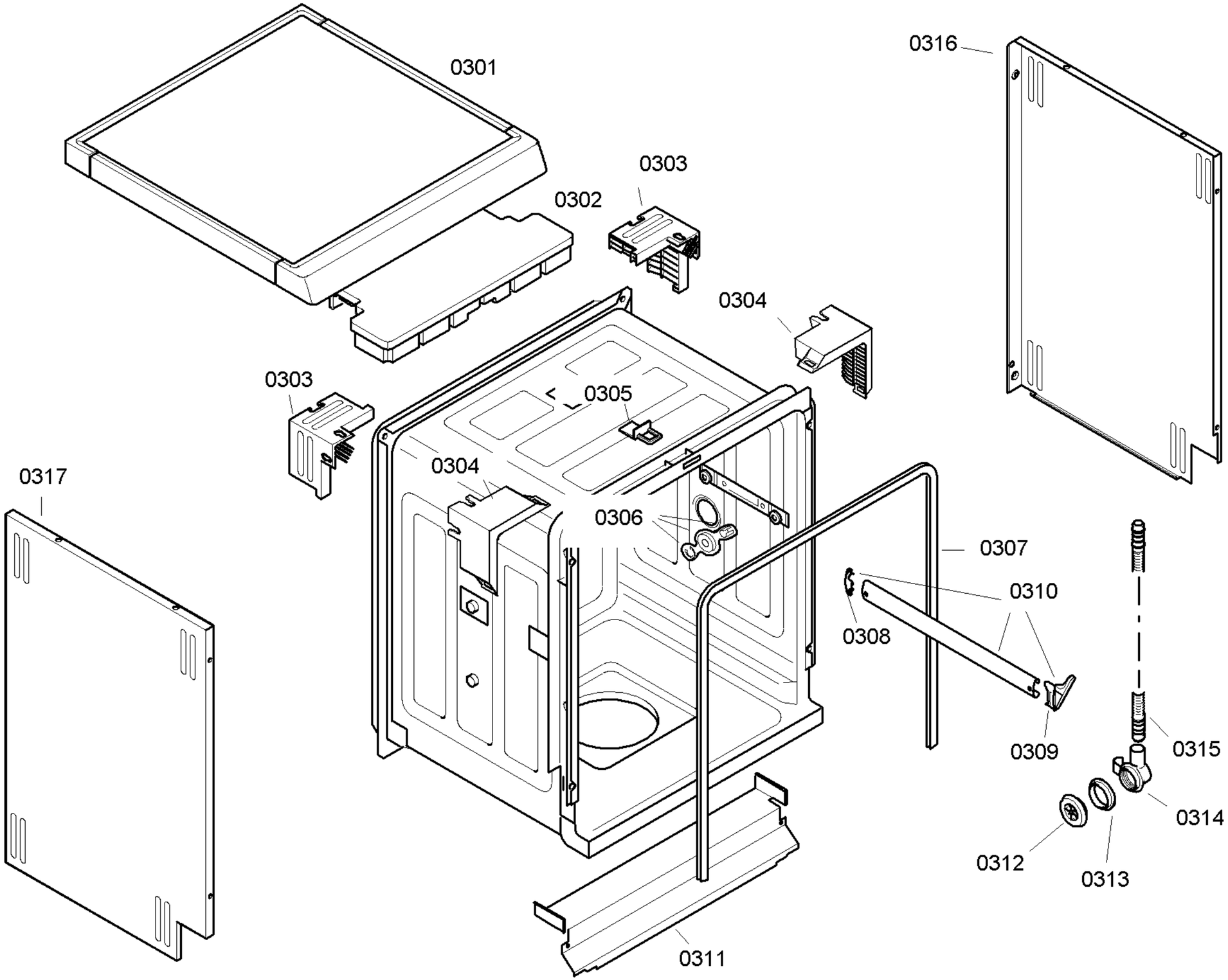

Copyright © (2020) by Lynx / 205502

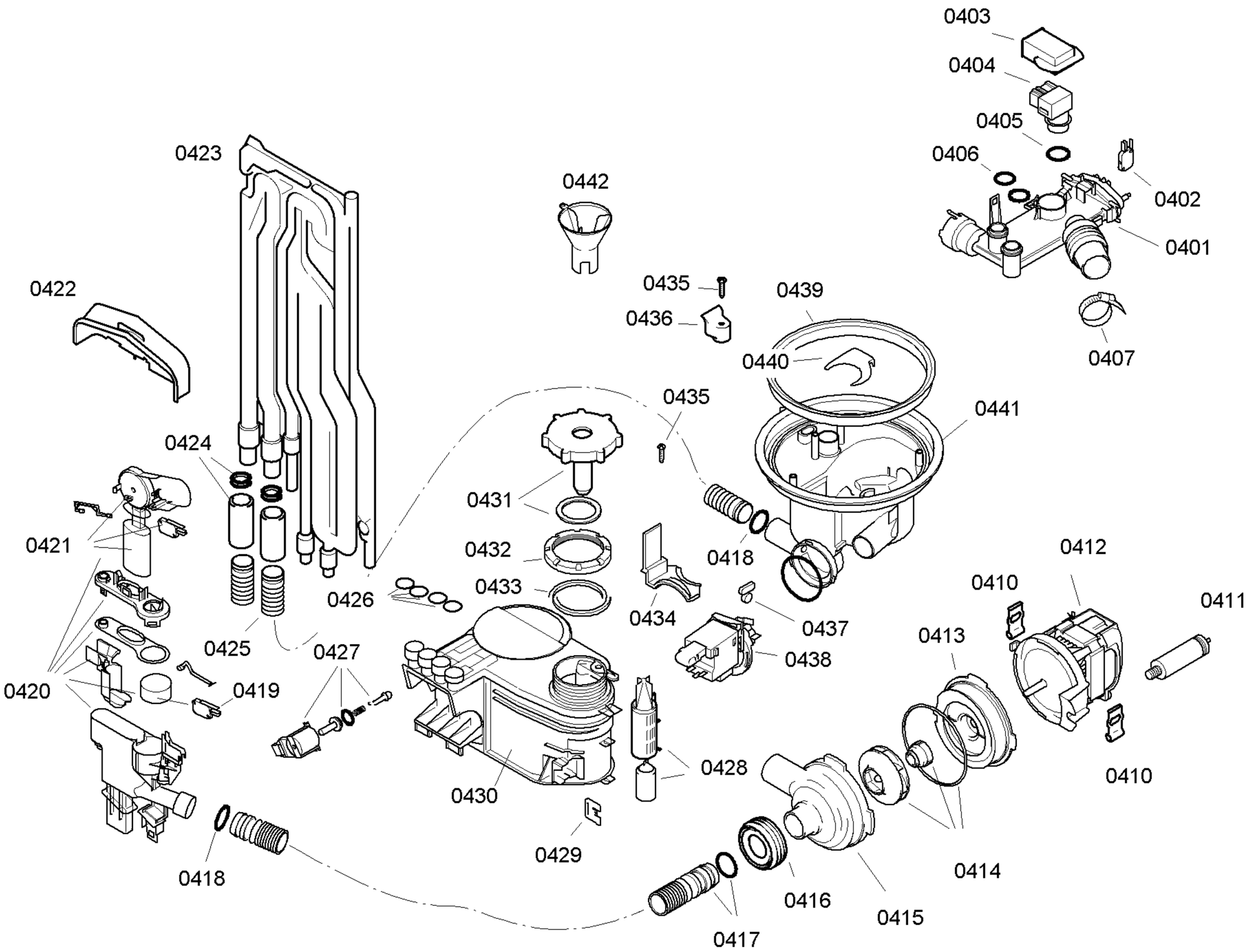

Copyright © (2020) by Lynx / 205502

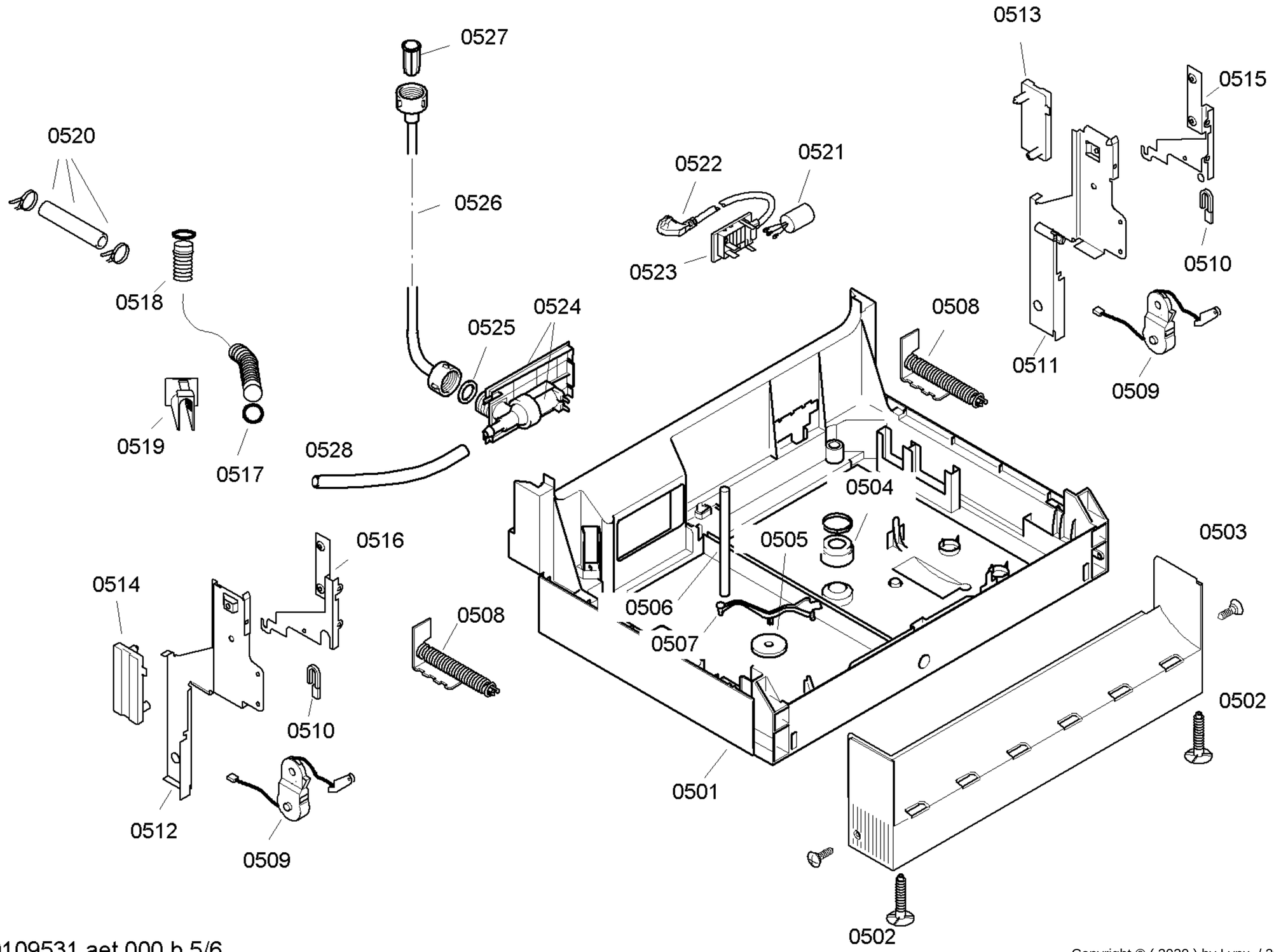

Copyright © (2020) by Lynx / 205502

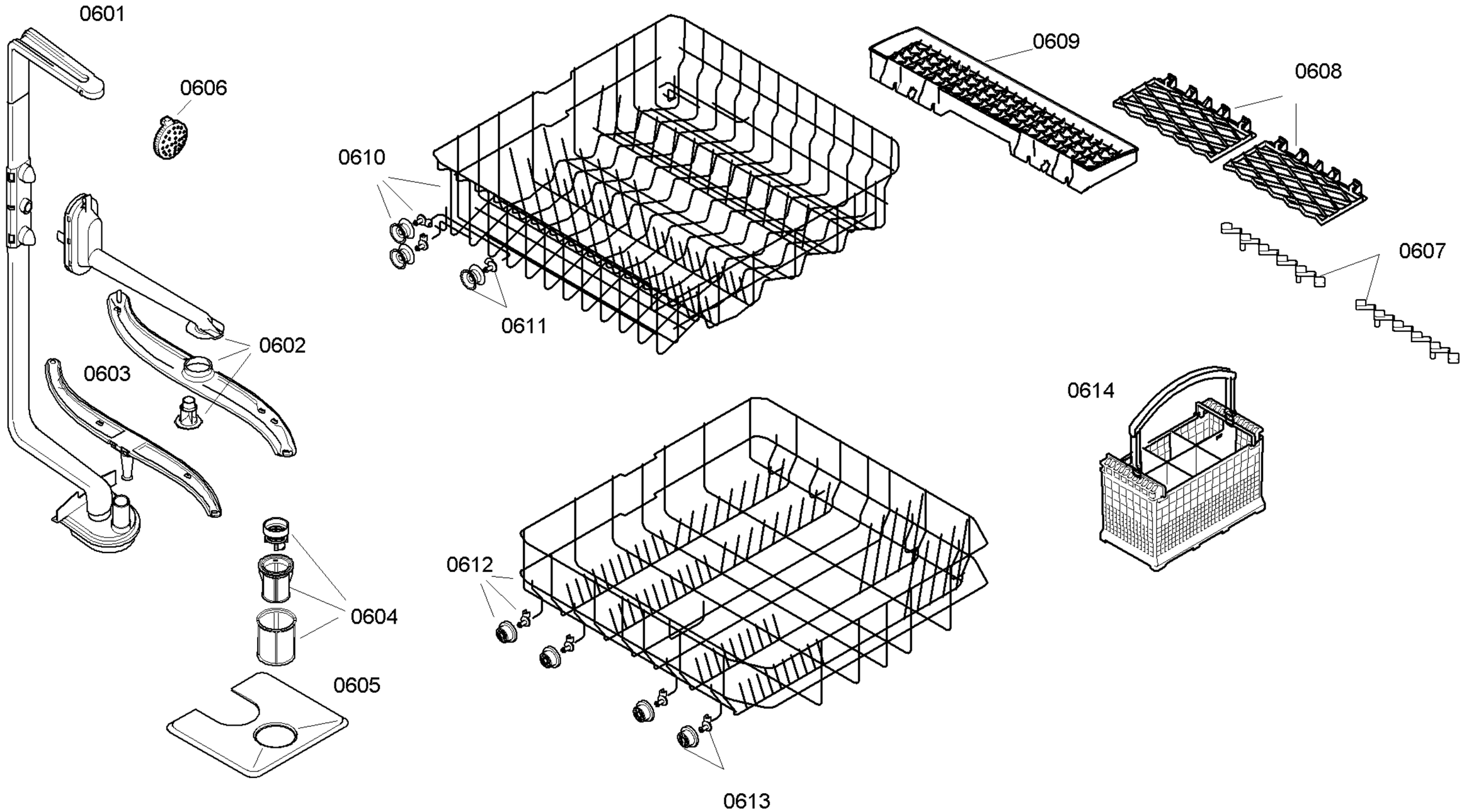

Copyright © (2020) by Lynx / 205502