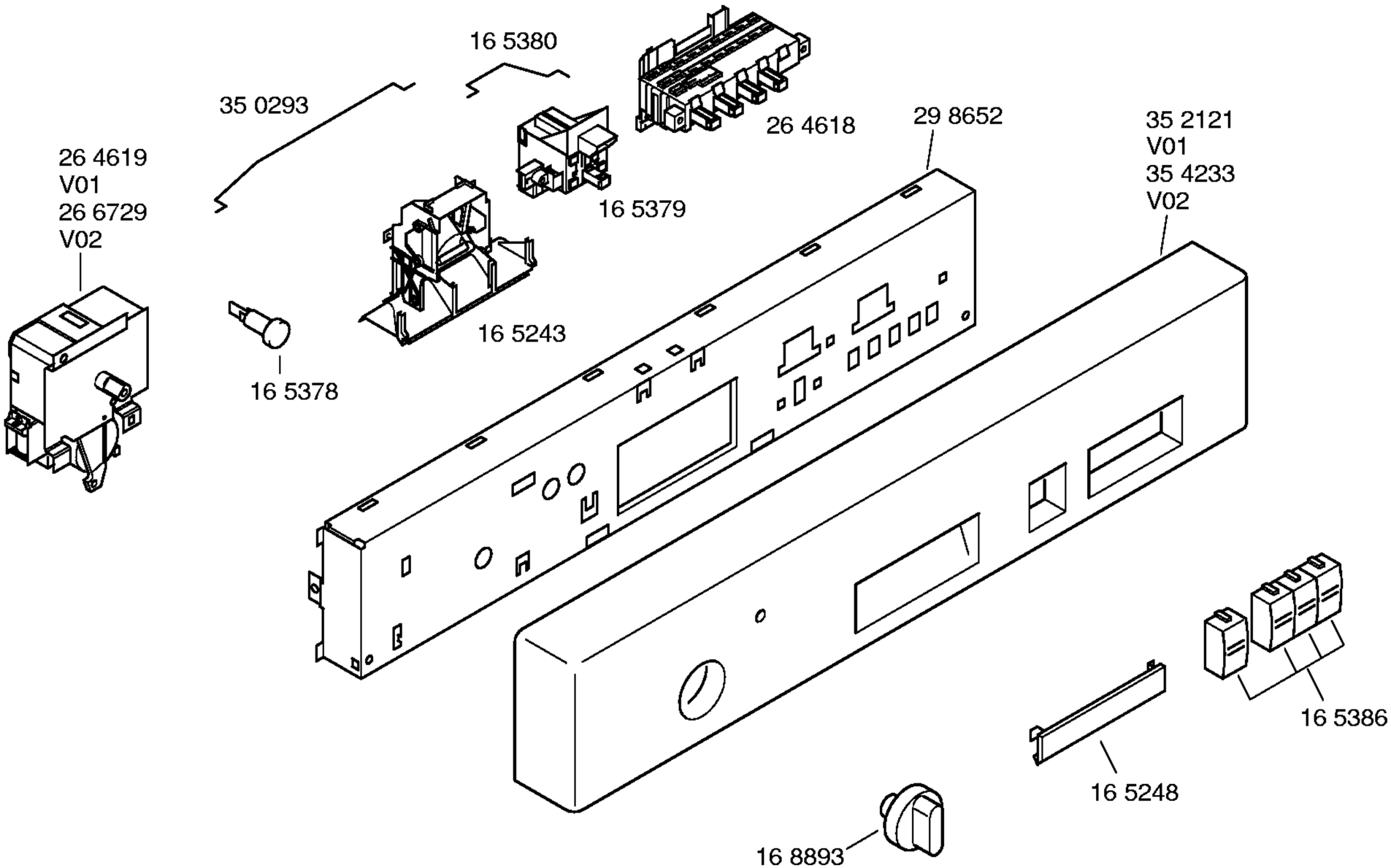

Gebrauchsanweisung
52 1634
(D,GB,F,NL)
52 1635
(I,GR,E,P)

Montage– / Aufstell–
anweisung
52 0359

Zubehör:

Entkalker
46 0038

Verlg. Aqua–Stop
Kunststoffrohr 2,2 m
Ablaufschlauch 1,95m
SZ72010

Kupferrohr
∅ 10 mm / 1,5 m
WX459700

Messerkas.–Backbl.–
Düse
SZ72000

Copyright © (2009) by Siemens / ESHOP_7_2

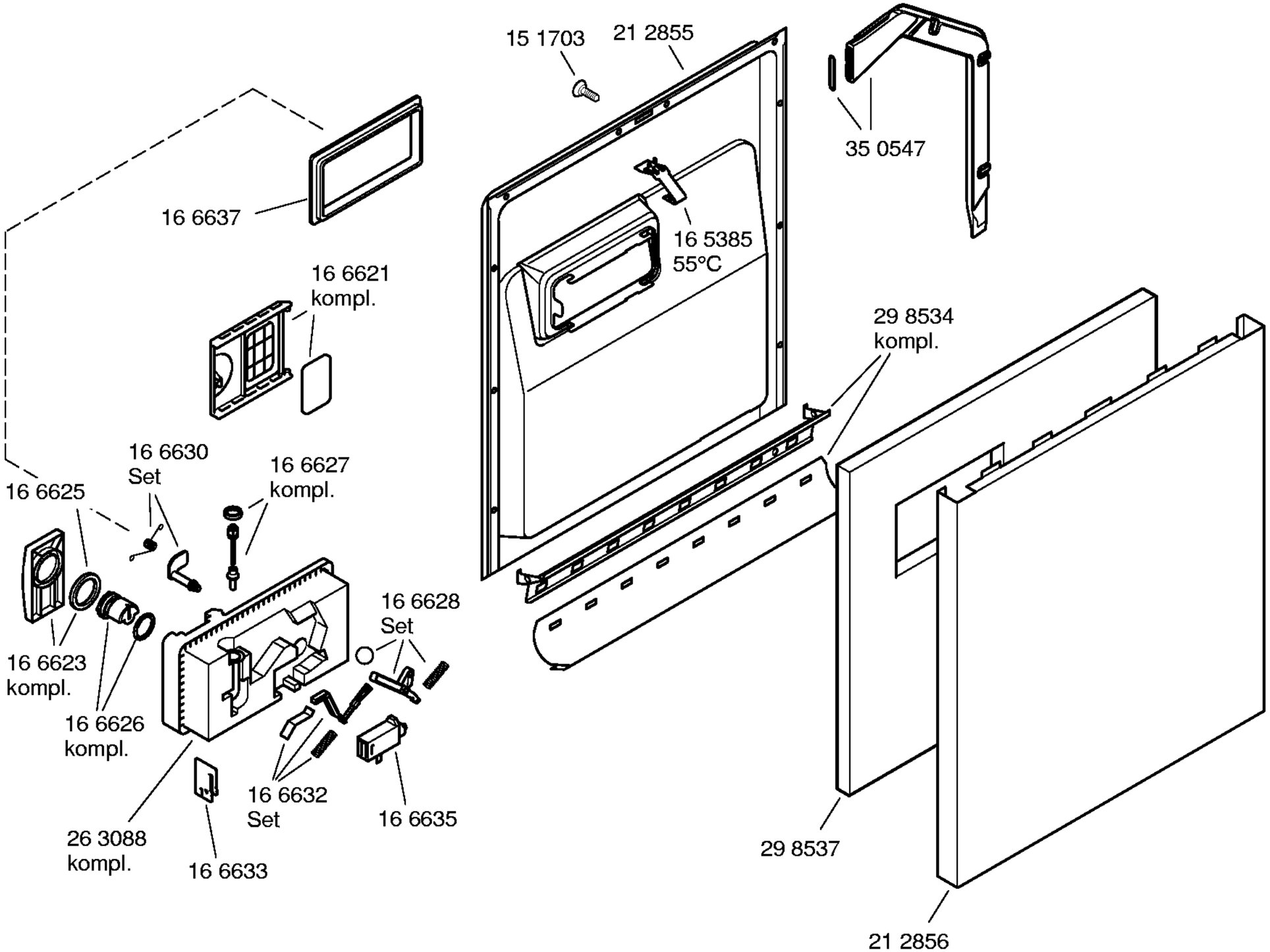

Copyright © (2009) by Siemens / ESHOP_7_2

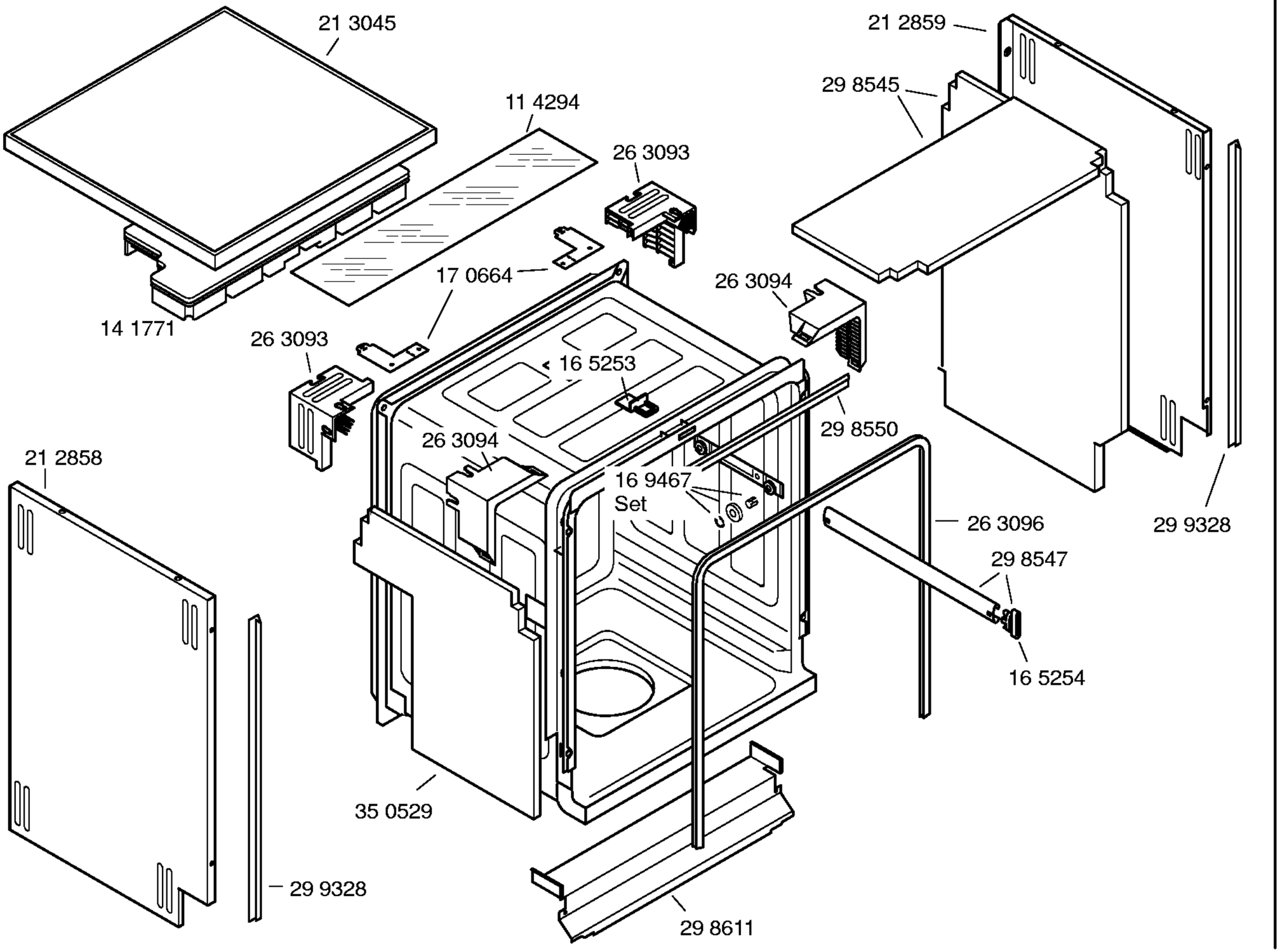

AET58306/03 0054609000

Copyright © (2009) by Siemens / ESHOP_7_2

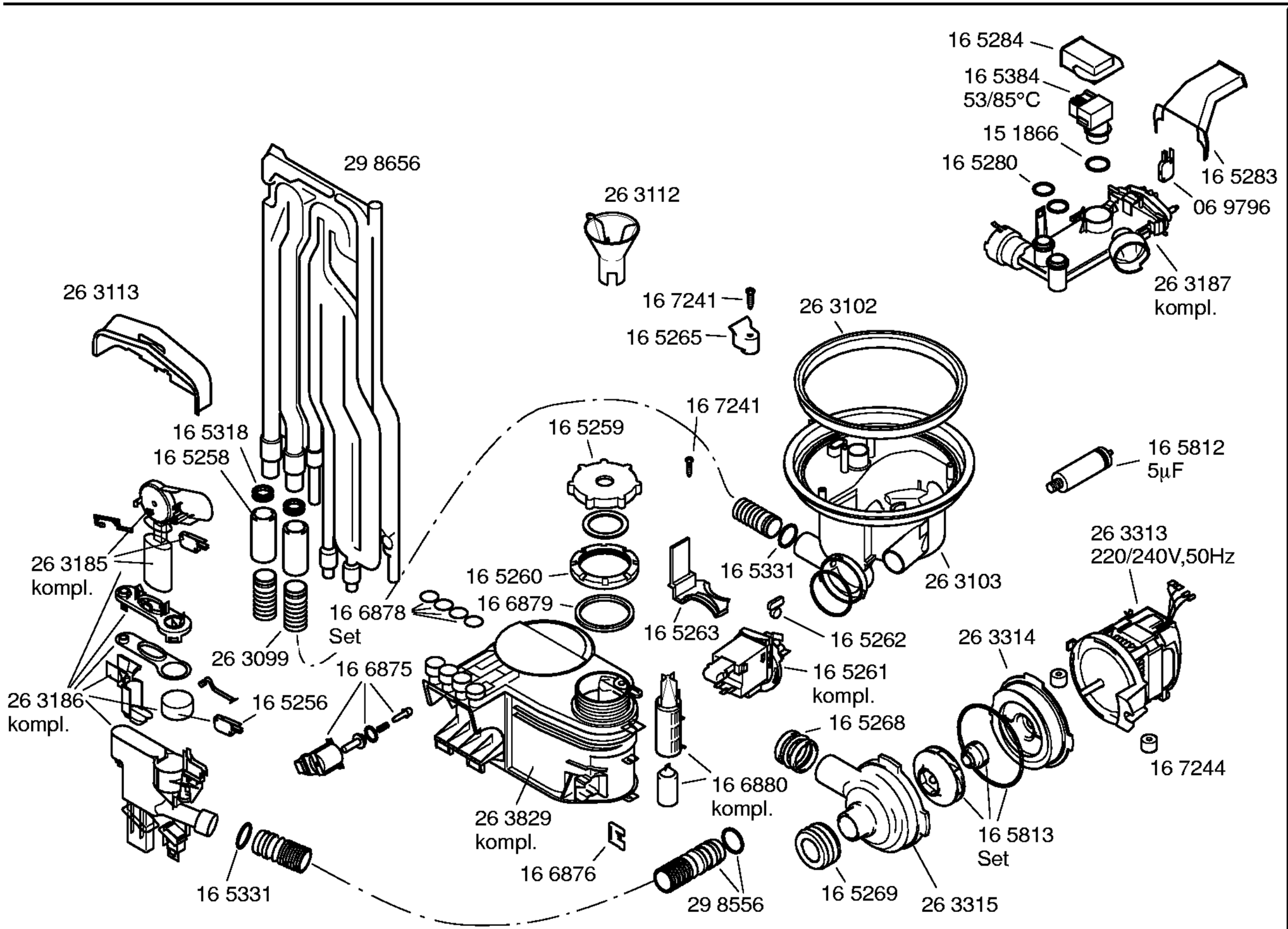

AET58306040054609000

Copyright © (2009) by Siemens / ESHOP_7_2

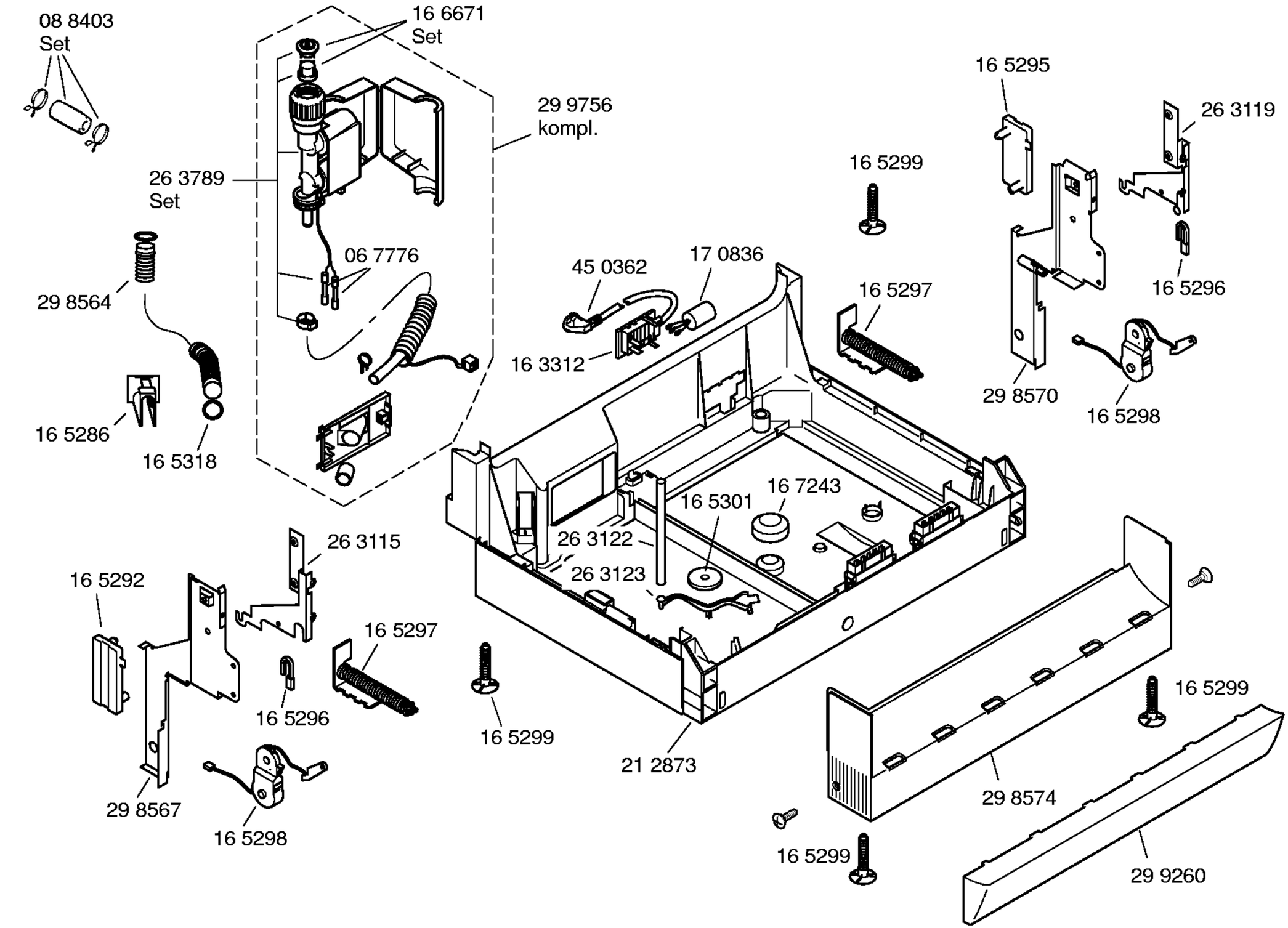

Copyright © (2009) by Siemens / ESHOP_7_2

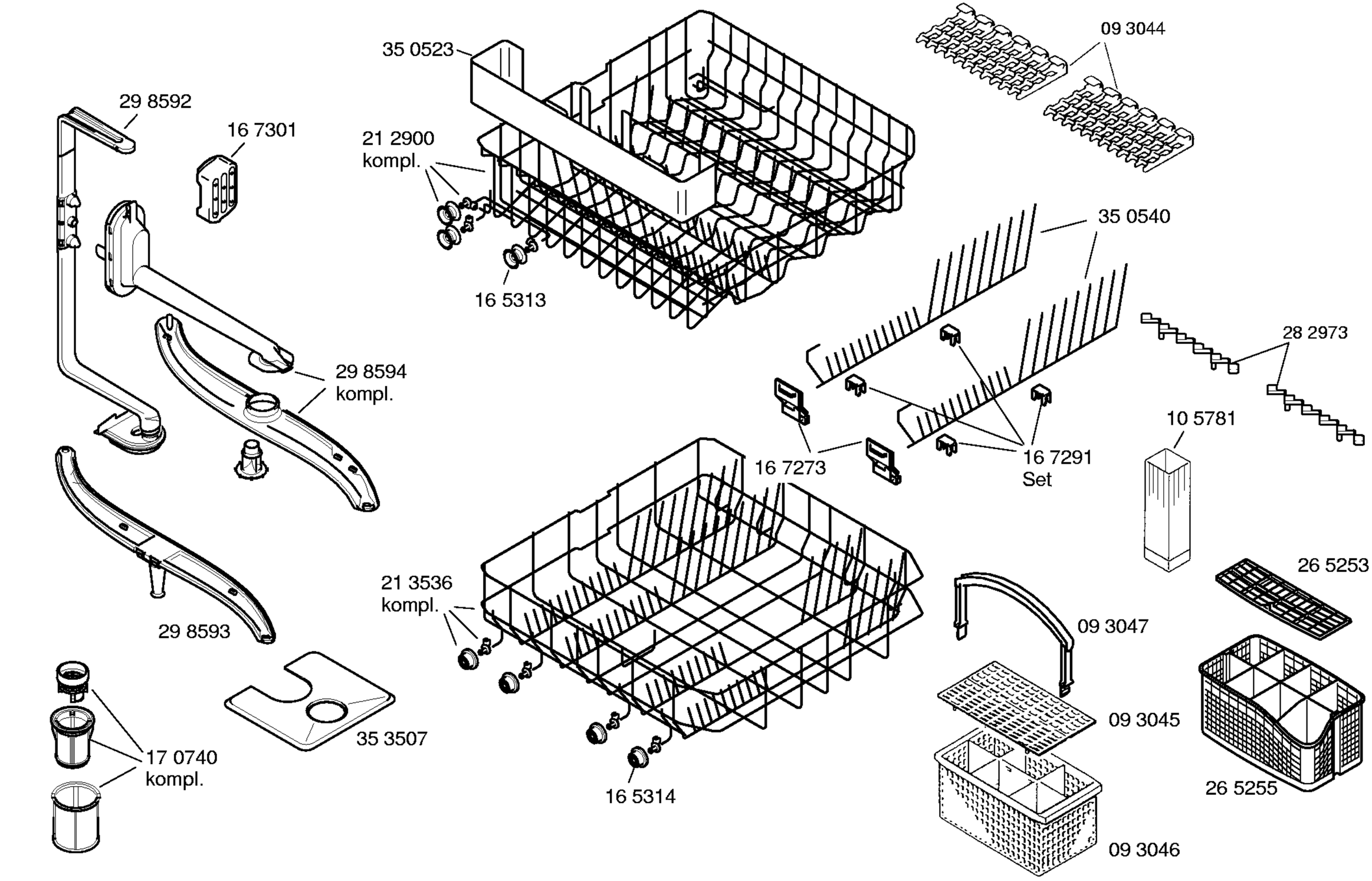

Copyright © (2009) by Siemens / ESHOP_7_2