0199

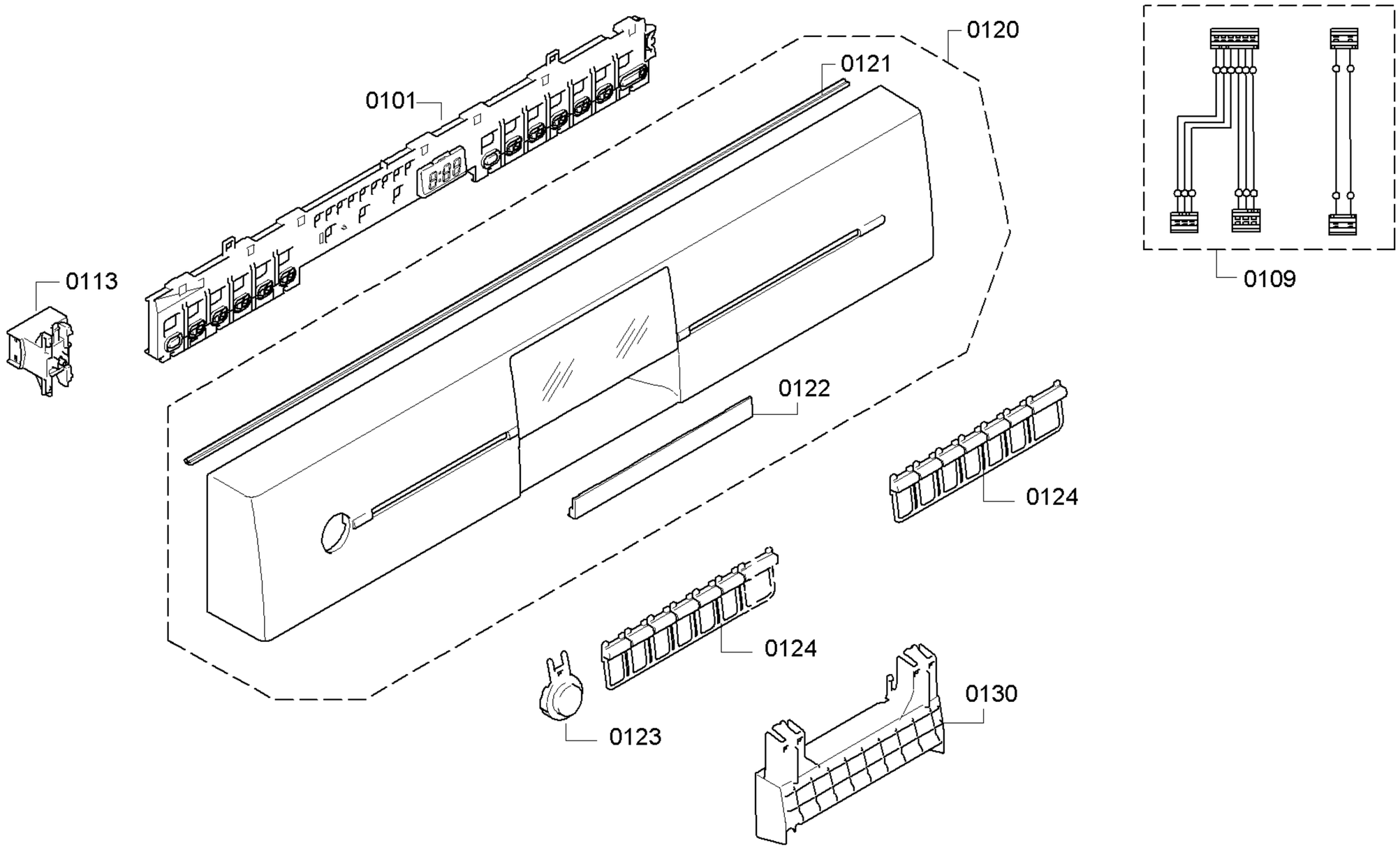

Copyright © (2013) by

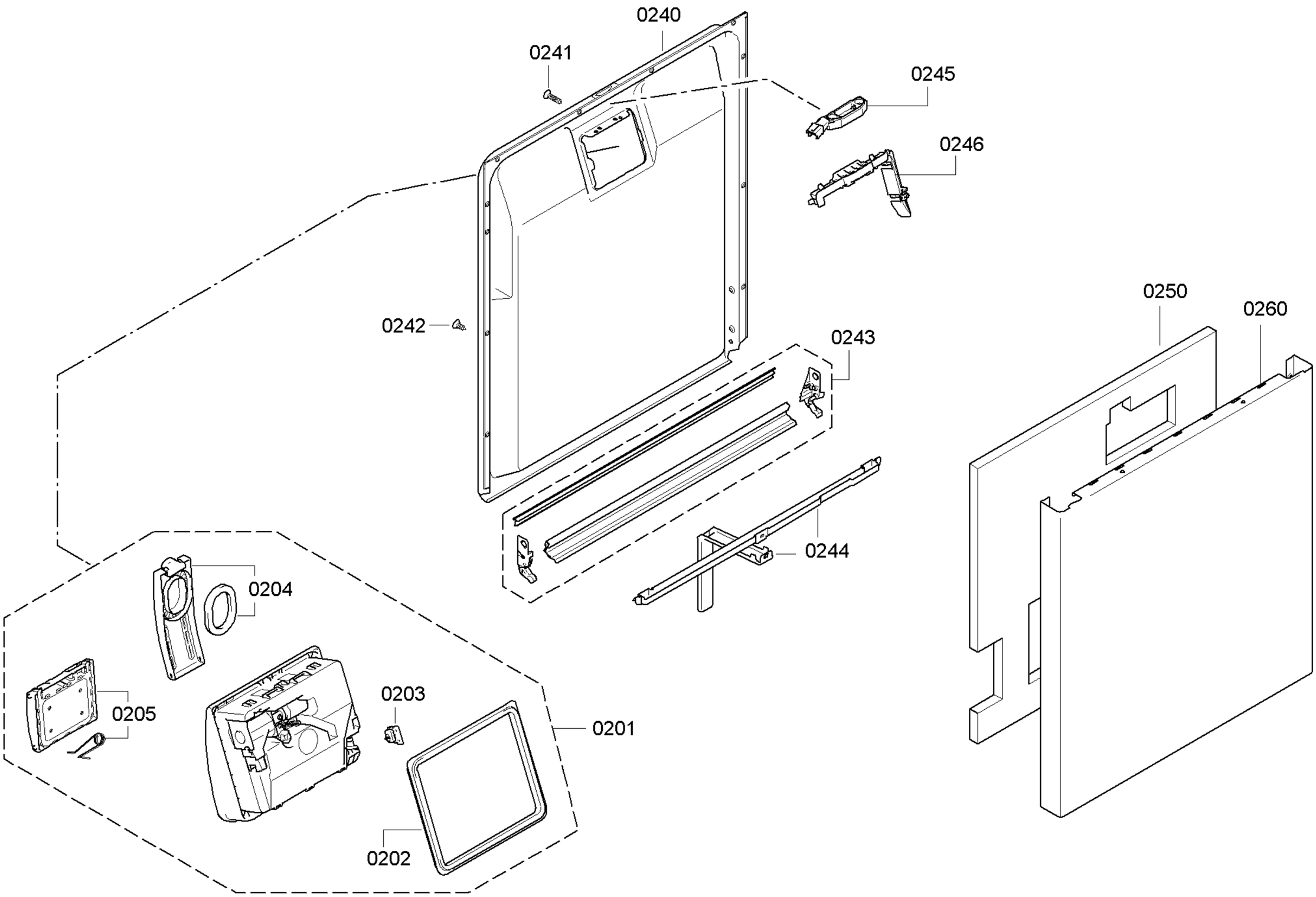

58300000156465 aet 000 a 2/6

Copyright © (2013) by

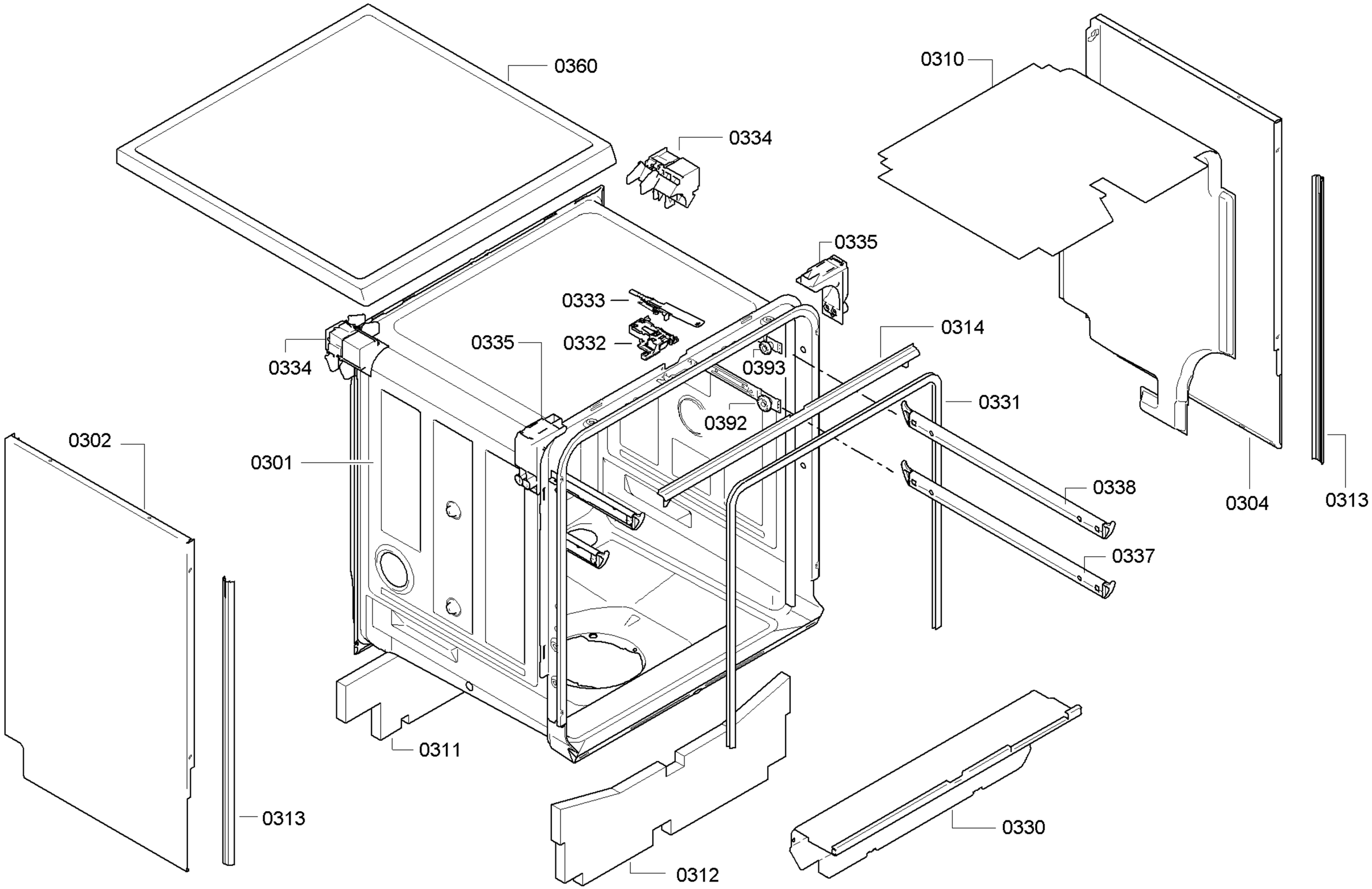

58300000156465 aet 000 a 3/6

Copyright © (2013) by

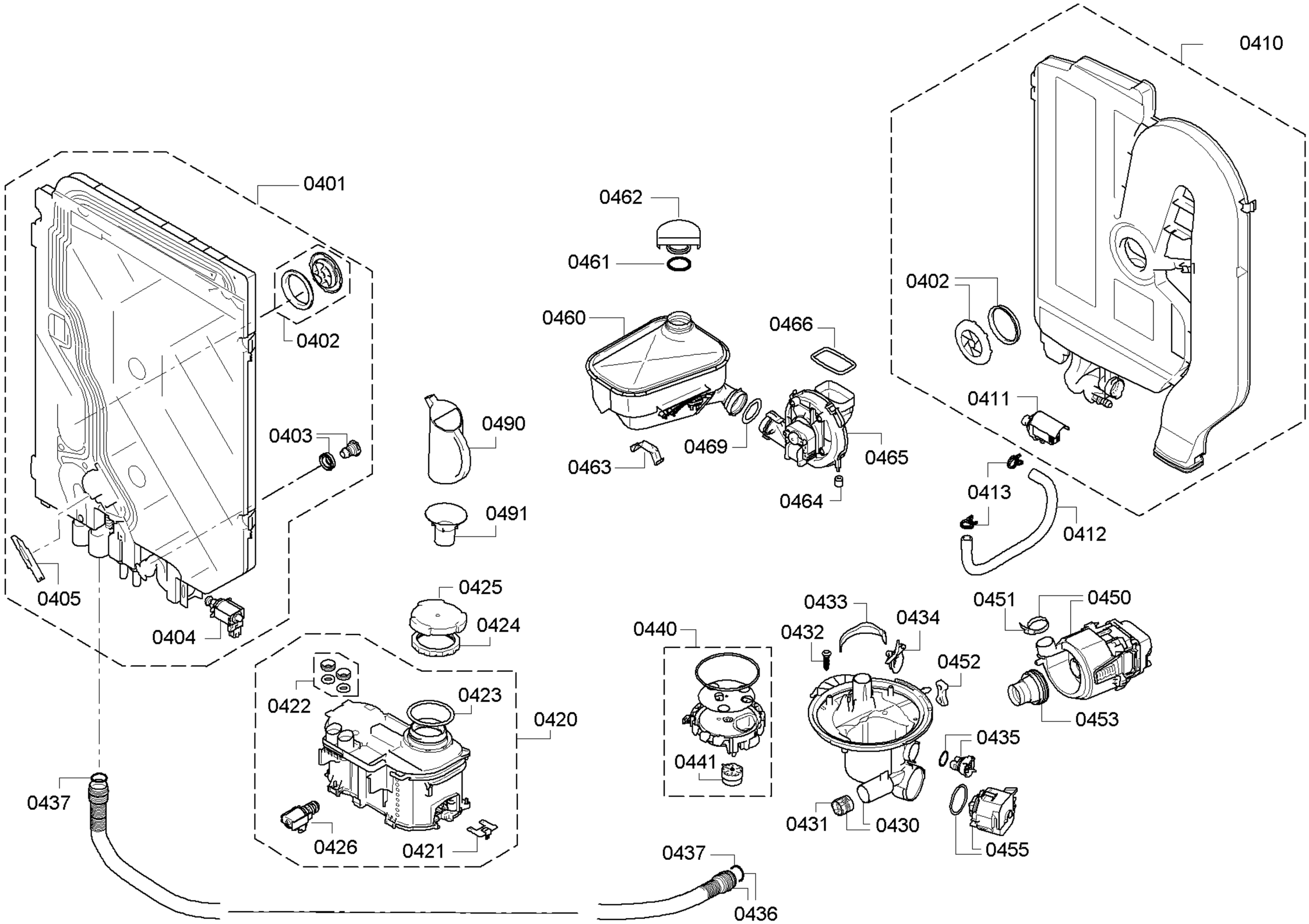

58300000156465 aet 000 a 4/6

Copyright © (2013) by

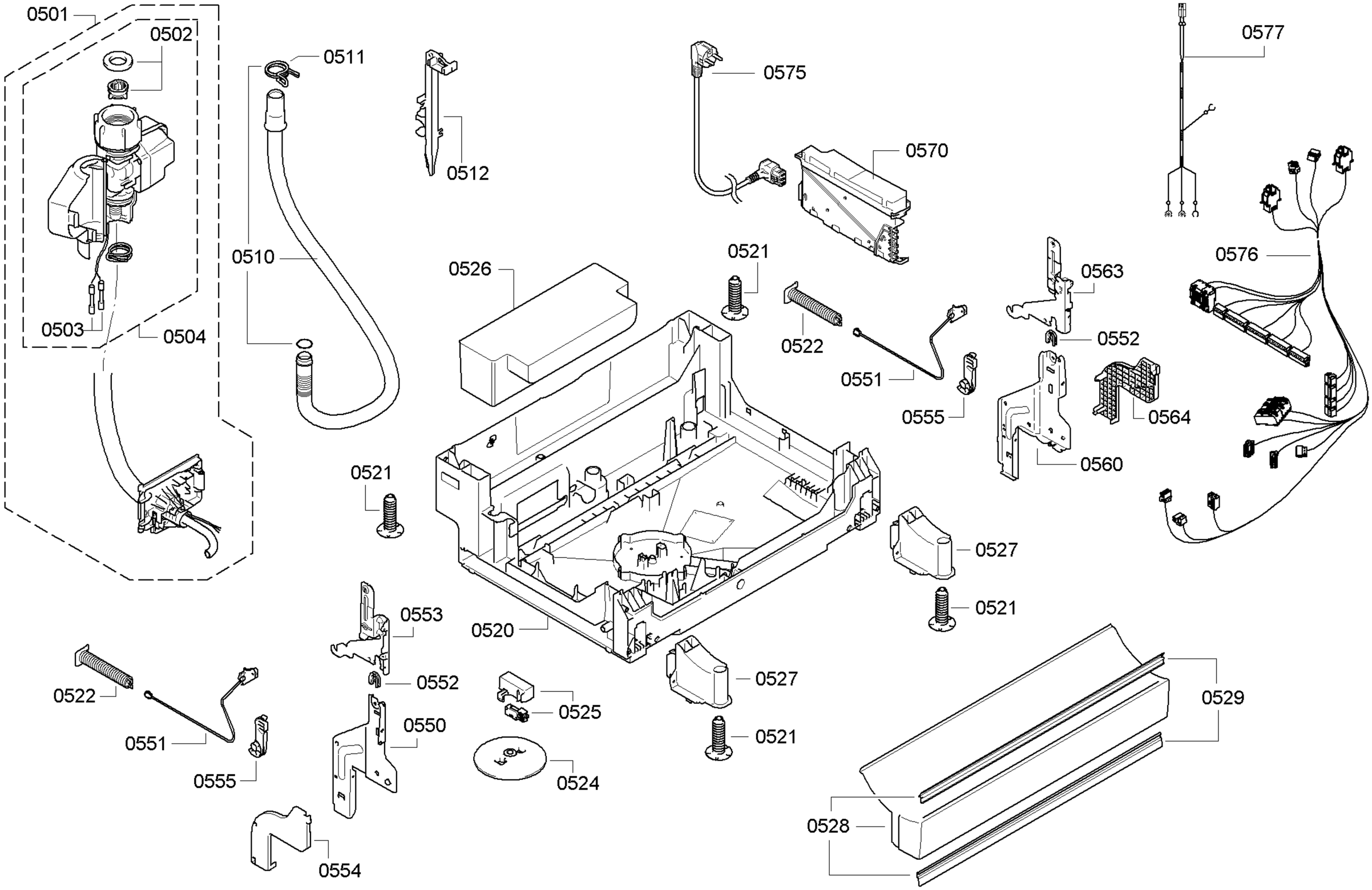

58300000156465 aet 000 a 5/6

Copyright © (2013) by

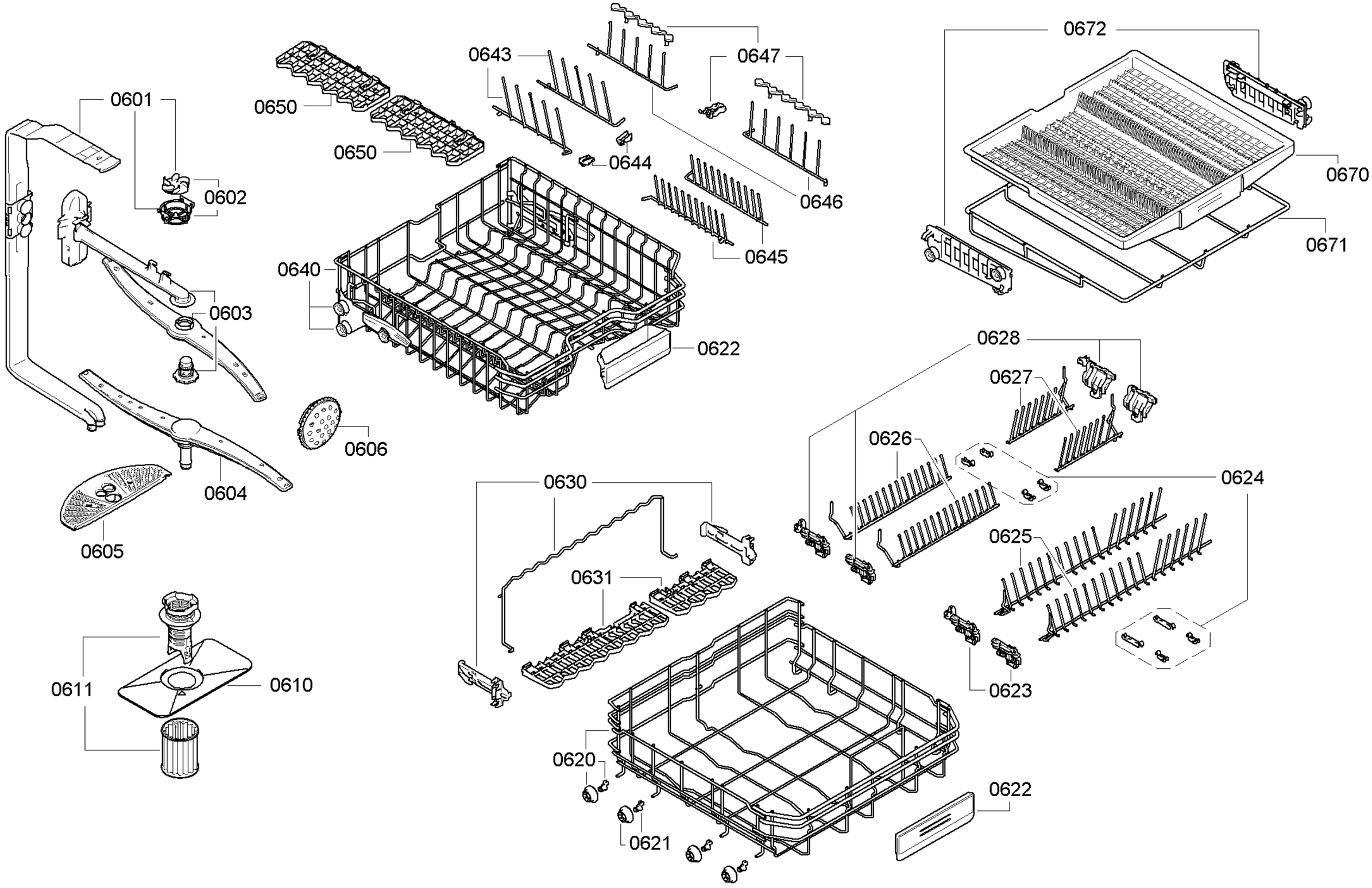

58300000156465 aet 000 a 6/6

Copyright © (2013) by