LAVAVAJILLAS /DISHWASHER MOD. DW7-45 FI1

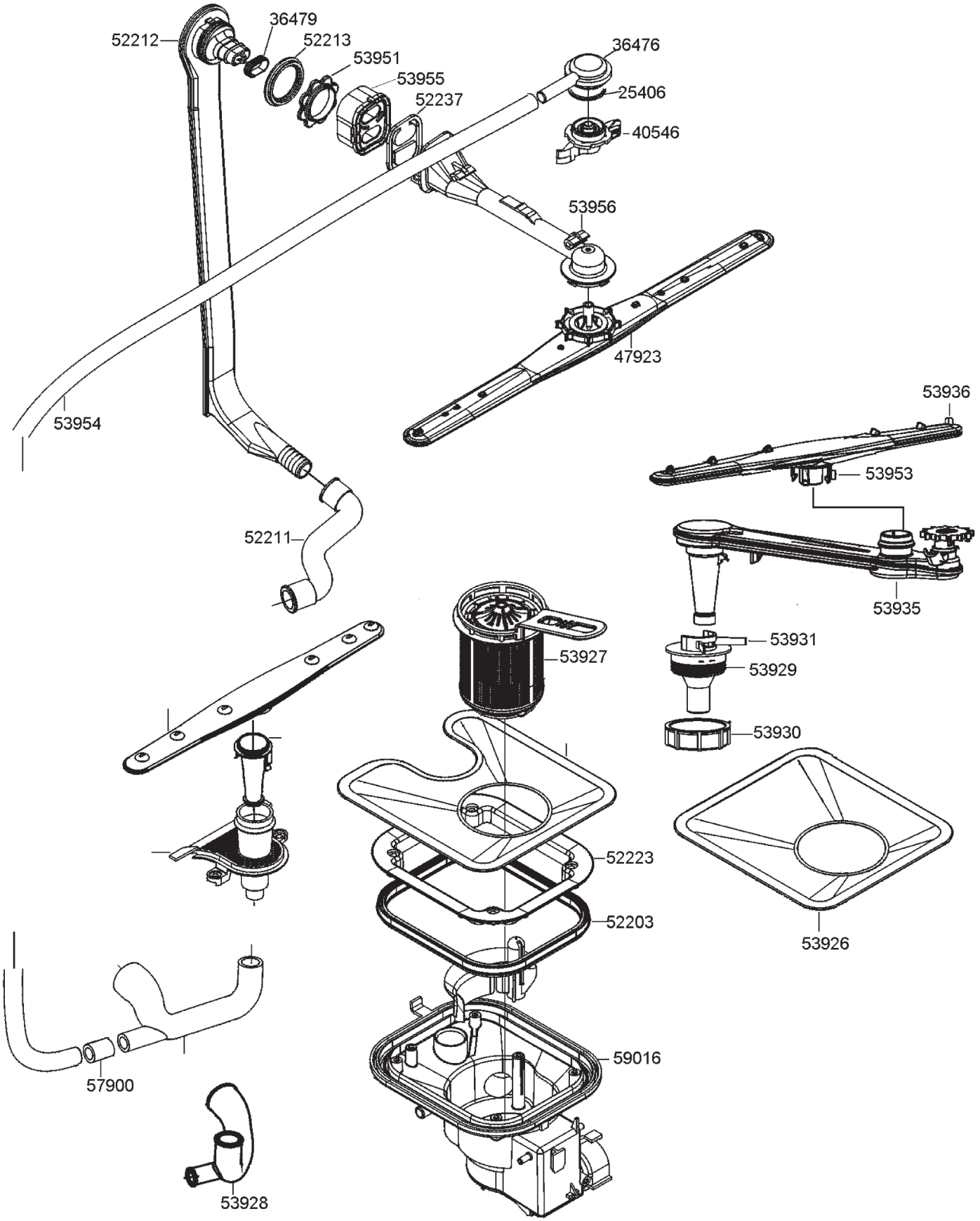

LAVAVAJILLAS /DISHWASHER MOD. DW7-45 FI1

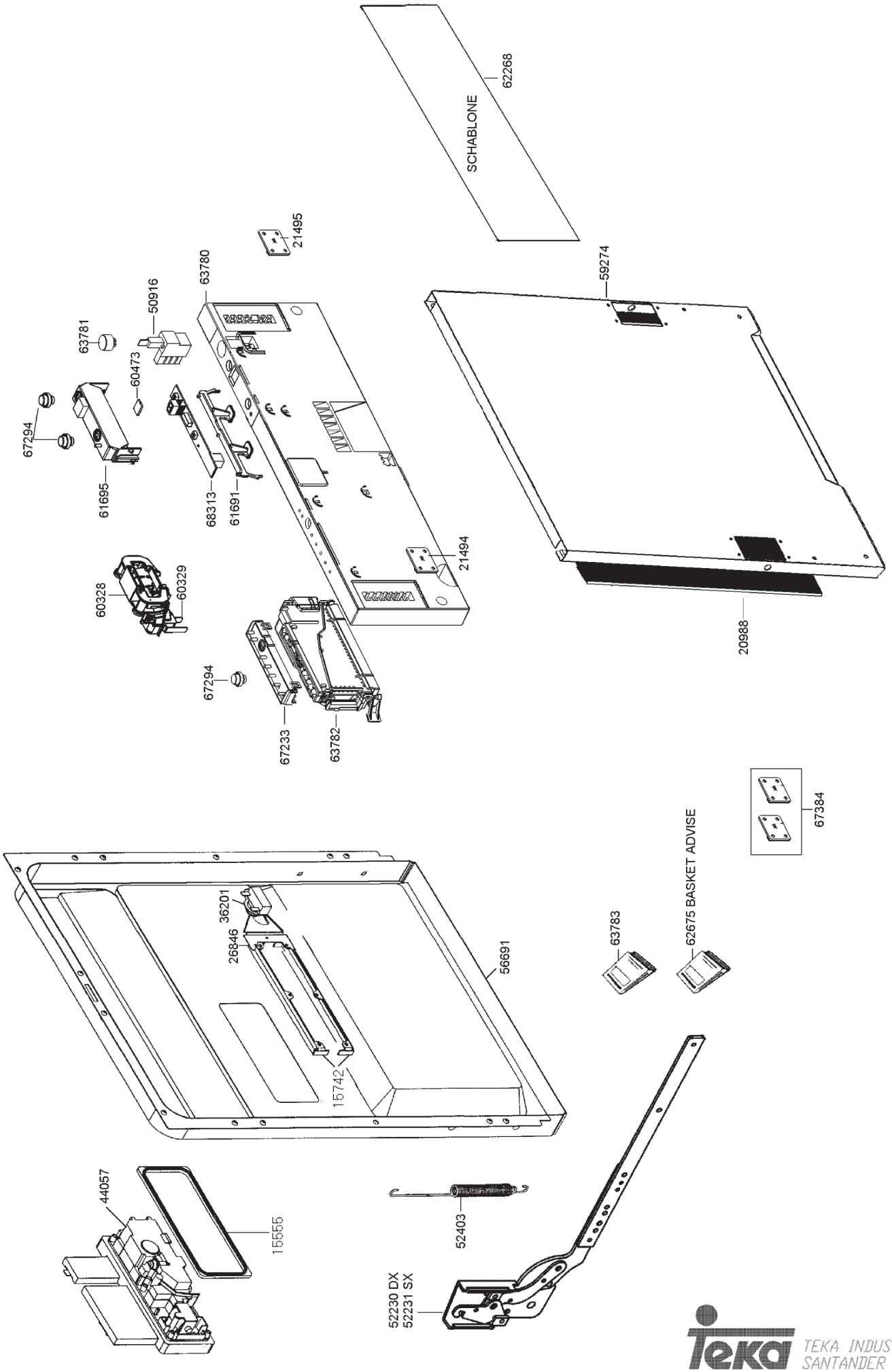

TEKA INDUSTRIAL, S.A.
SANTANDER - ESPAÑA

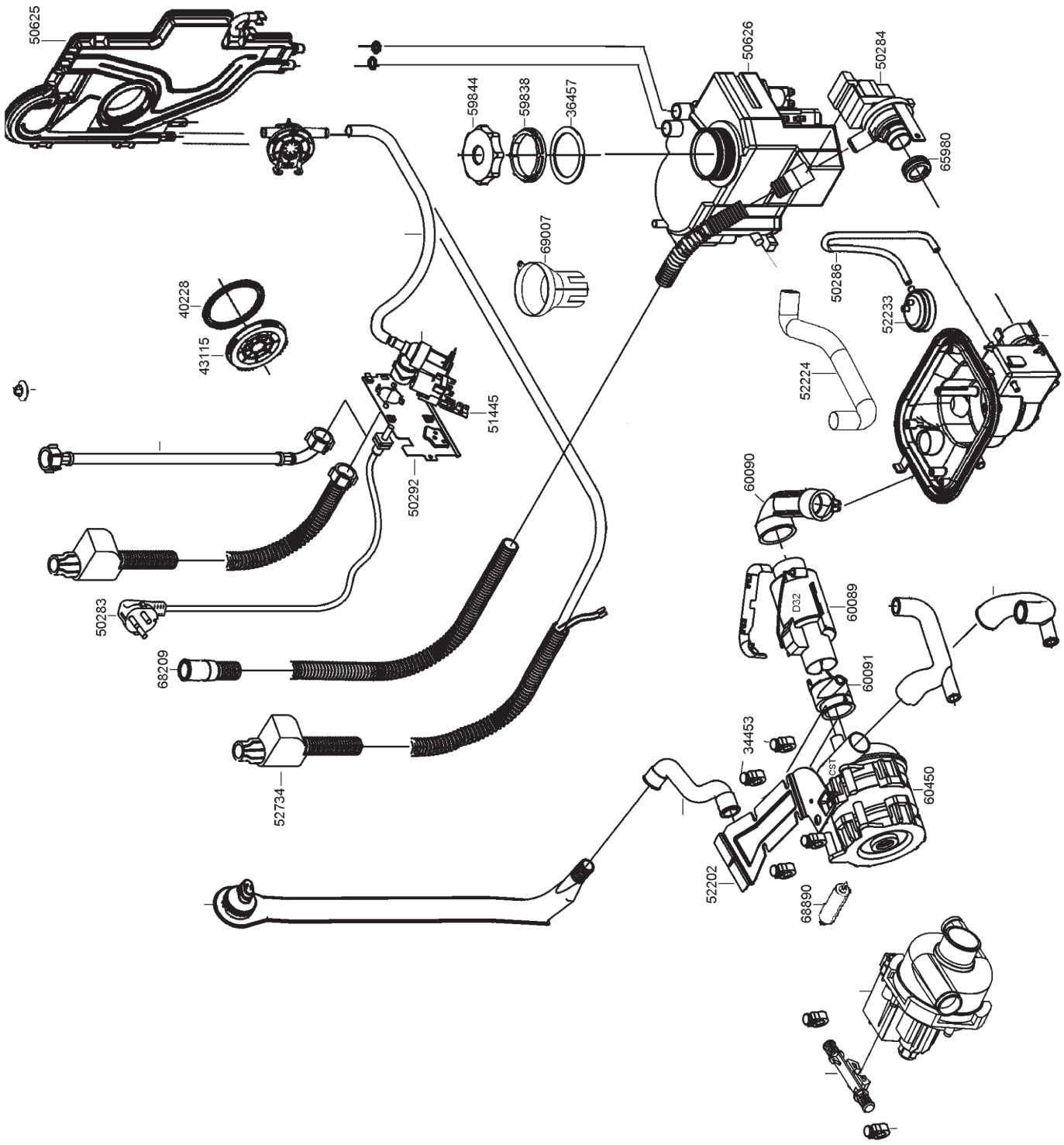
50625
50626
50284
59844
59838
36457
65980
69007
40228
43115
50286
52233
52224
51445
50292
60090
50283
60089
D32
68209
60091
34453
CST
60450
52734
52202
68890

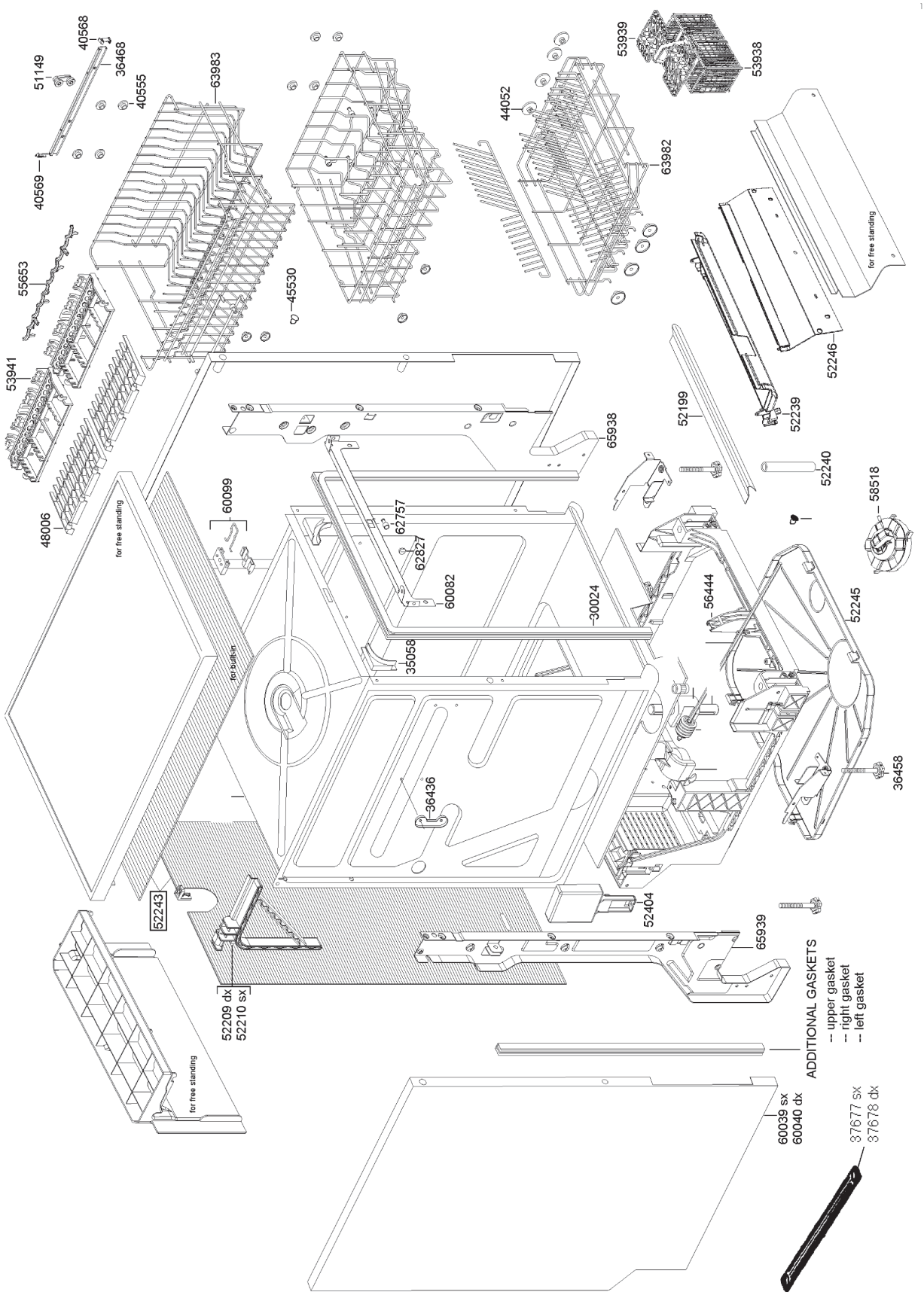
40568
36468
51149
40555
63983
53939
53938
44052
63982
40569
55653
45530
53941
48006
for free standing
60099
62757
62827
60082
65938
52199
52239
52246
52240
58518
30024
56444
52245
35058
for built-in
36436
36458
52243
52404
65939
52209 dx
52210 sx
ADDITIONAL GASKETS
-- upper gasket
-- right gasket
-- left gasket
60039 sx
60040 dx
37677 sx
37678 dx